Portescap

PRODUCT CATALOG

Miniature Motion Solutions for
Performance-Critical Applications

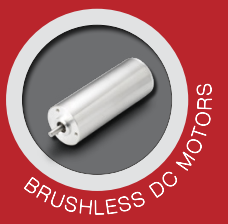

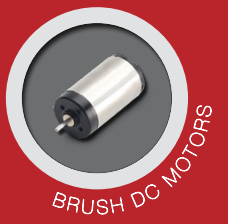

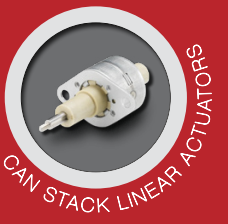

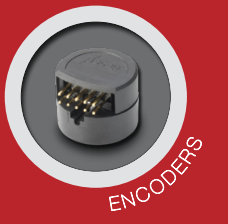

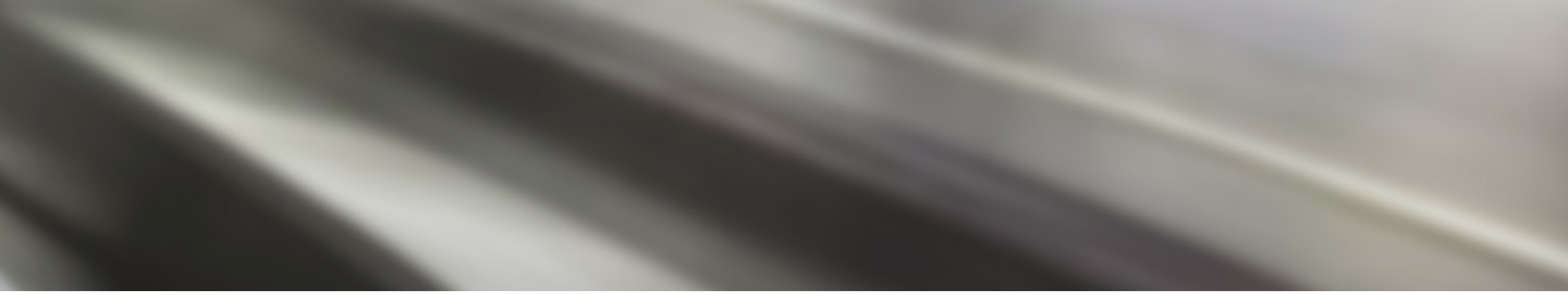

Table of Contents

6–8 Welcome To Portescap

9–39 Brushless DC Motors

40–59 Motors for Surgical Applications

61–113 Brush DC Motors

115–131 Disc Magnet Motors

133–151 Can Stack Motors

153–167 Can Stack Linear Actuators

169–190 Gearheads & Encoders

192–209 Engineer's Appendix

Product Index

Product Index

Brushless DC Motors 10
16BHS 2-wires 16
16ECP36 Ultra EC™ 17
16ECP36 2-wire Ultra EC™ 18
16ECP52 Ultra EC™ 20
16ECP52 2-wire Ultra EC™ 21
21BF NuvoDisc™ 23
22ECP35 Ultra EC™ 24
22ECP45 Ultra EC™ 25
22ECP60 Ultra EC™ 26
22ECS45 Ultra EC™ 27
22ECS60 Ultra EC™ 28
22ECT35 Ultra EC™ 29
22ECT48 Ultra EC™ 30
22ECT60 Ultra EC™ 31
22ECT82 Ultra EC™ 32
26BC 3C 33
26BC 6A 34
30ECT64 Ultra EC™ 35
30ECT90 Ultra EC™ 36
32BF nuvoDisc™ 37
35ECS60 Ultra EC™ 38
35ECS80 Ultra EC™ 39

Motors For Surgical Applications 40
B0512N1029 Spine Drill 43
B0512N4080 ENT Microdebrider 44
B0512N4081 ENT Microdebrider 45
B0612H1005 Cannulated Shaver/Microdebrider 46
B0612H1007 Cannulated Shaver/Microdebrider 47
B0614H4041 Arthroscopic Shaver 48
B0614H4042 Arthroscopic Shaver 49
B0912N1016 Small Bone Orthopedic Drill 50
B0912N4023 Small Bone Orthopedic Drill 51
B0912N4024 Small Bone Orthopedic Saw 52
B1112N4004 Large Bone Orthopedic Drill/Reamer 53
B1210N1021 Large Bone Orthopedic Drill/Wire Driver 54
B1210N1023 Large Bone Orthopedic Drill/Wire Driver 55
B1210N1025 Large Bone Orthopedic Saw/Reamer 56
B1210N1027 Large Bone Orthopedic Saw/Reamer 57
CNT1530 58

Brush DC Motors 61
08GS61 64
10NS61 Athlonix™ 65
12G88 Athlonix™ 66
12GS88 Athlonix™ 67
13N88 68
16C18 69
16DCP Athlonix™ Precious Metal 70
16DCP Athlonix™ Graphite-Copper 72
16DCT Athlonix™ Precious Metal 74
16DCT Athlonix™ Graphite-Copper 76
16G88 78
16N78 Athlonix™ 79
16S78 Athlonix™ 80
17DCT Athlonix™ Precious Metal 81
17DCT Athlonix™ Graphite-Copper 83
17N78 85
17S78 86
22DCP Athlonix™ Precious Metal 87
22DCP Athlonix™ Graphite-Copper 89
22DCT Athlonix™ Precious Metal 91
22DCT Athlonix™ Graphite-Copper 93
22N78 Athlonix™ 95
22S28 96
22S78 97
23GST2R82 98
24DCT Athlonix™ Precious Metal 99
24DCT Athlonix™ Graphite-Copper 101
25GST2R82 103
25GT2R82 104
26N58 105
28DT12 106
28L28 107
28LT12 108
30GT2R82 109
35NT2R32 110
35NT2R82 111
35GLT2R82 112

Disc Magnet Motors 115
P010 104 (Upon Request) 118
P010 064 (Upon Request) 119
PH010 104 (Upon Request) 120
PH010 064 (Upon Request) 121
P110 104 122
P110 064 123
P310 124
P430 125
P520 126

V092020 • © 2020 Portescap. Specifications subject to change without notice.

PP520 127
P532 128
P532 with Encoder 129
P760 with Encoder 130

Can Stack Motors 133
15M020D 136
20M020D 137
26M024B 138
26M024D 139
26M048B 140
26M048D 141
35L048B 142
35L048D 143
35M048B 144
35M048D 145
42L048D 146
42M048C 147
42M048D 148
42M100B 149
60L024B 150

Can Stack Linear Actuators 153
20DAM-K 156
20DAM-L 157
20DBM-K 158
20DBM-L 159
26DAM-K 160
26DAM-L 161
26DBM-K 162
26DBM-L 163
35DBM-K 164
35DBM-L 165
42DBL-K 166
42DBL-L 167

Gearheads & Encoders 169
R10 172
R13 173
B16 174
BA16 175
R16 176
R22 177
R22HT 178
K24 179
K27 180
R32 181
R40 182
D12 184
D16 185
E9 186
F16 187
HEDS 5500/5540 188
MR2 189
M Sense B 190

Welcome to Portescap

Portescap is the innovation leader in miniature motors and precision motion control technologies for performance-critical applications that save, improve and enhance lives. We continually advance the state of the art for power, precision and efficiency in miniature motion. Driven by our passion for innovation, technical excellence and quality service, we deliver best-in-class products and custom engineering services to ensure a perfect fit for your applications.

Power, Precision, Efficiency

Brushless DC Motors
Optimum speed, torque and life; autoclavable option

Brush DC Motors
Outstanding efficiency, power density and acceleration

Disc Magnet Motors
Increased resolution with high speed capability

Can Stack Motors
Precise, cost-effective open-loop control

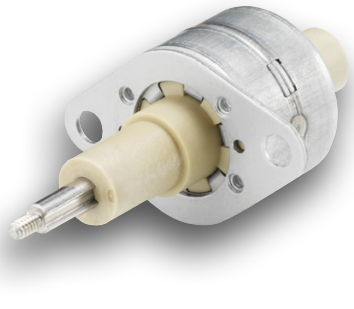

Can Stack Linear Actuators
Compact package delivers high force with direct linear motion

Gearheads & Encoders
Spur and planetary gearheads, optical and magnetic encoders

Miniature Motors For Performance-Critical Applications

Innovative motion technologies and custom engineering services that ensure a perfect fit for your individual application.

RESPIRATORY CARE
BLDC motors provide responsiveness and efficiency for improved patient acceptance and extended device life.

CLINICAL DIAGNOSTICS
Portescap offers the required breadth of motor technology to optimize movement and meet your application needs.

INDUSTRIAL POWER TOOLS
High torque-to-weight ratio, lower noise and high efficiency offer best-in-class performance.

AUTOMATION/ ROBOTICS
Smooth motion and improved accuracy at higher speeds increase machine throughput and handling performance.

INFUSION SYSTEMS
Highly efficient mini motors allow for compact pump design with longer battery life.

AEROSPACE
Highly powered brushless and brush DC motors reduce weight and size and provide high precision.

SURGICAL POWER TOOLS
High power and performance for better surgical outcomes.

OTHER INDUSTRIES
Extraordinary torque density, efficiency and reliability for a wide variety of OEM markets and applications.

We leverage our miniature motor technologies and application know-how to serve a spectrum of motion control applications

Choose the Right Technology for Your Application

	Brushless DC Slotted	Brushless DC Slotless	Brush DC	Disc Magnet	Can Stack	Can Stack Linear Actuator
Efficiency/battery life	++	+++	++++	+	+	+
Motor lifetime	++++	++++	++	++++	+++	++
Autoclavability	++++		+			
Ability to withstand harsh environments	++++	+++	++	++	+	+
High power/weight ratio	++++	++++	+++	+++	+	+
High motor acceleration	++	++	+++	++++		
Open loop positioning	+	+		++++	++	+++
Simple control	+	+	++++	++	++	++
Low noise	+++	++++	+++	++	++	+
Ease of achieving linear motion						++++
Max rated continuous torque	++++	++++	+++	++++	+	
Max speed	++++	++++	+++	++	+	+

Brushless Slotted DC
Frame Size: 12.7 to 50.8 mm*
Speed: up to 100,000 rpm
Torque: up to 6,526.6 mNm
**upon request*

Brushless Slotless DC
Frame Size: 16 to 35 mm
Speed: up to 70,000 rpm
Torque: up to 225 mNm

Brush DC Coreless
Frame Size: 8 to 35 mm
Speed: up to 16,000 rpm
Torque: up to 160 mNm

Stepper Disc Magnet
Frame Size: 10* to 74 mm
Speed: up to 10,000 rpm
Torque: up to 325 mNm
**upon request*

Stepper Can Stack
Frame Size: 15 to 60 mm
Speed: up to 1,000 rpm
Torque: up to 300 mNm

Digital Linear Actuator
Frame Size: 20 to 42 mm
Speed: up to 500 full steps
Force: up to 102 N

Gearheads
Frame Size: 8* to 40 mm
Speed: up to 10,000 rpm
Torque: up to 10 Nm
**upon request*

Encoders
Frame Size: 8* to 30 mm
Technology: Magnetic, Optical
Line Count: 1 to 1024
**upon request*

The Miniature Motion Leader

Continuous innovation to create the highest precision and performance in miniature motion applications.

The widest range of miniature motion technologies to suit virtually any configuration, environment and envelope.

Application-specific customization and rapid prototyping, with research and development teams in strategic locations around the world.

Collaboration to understand your motion control needs and devise a smart, perfect-fit way to do the job better.

A commitment to service and support throughout your application's lifecycle, worldwide.

V092020 • © 2020 Portescap. Specifications subject to change without notice.

Brushless dc motors

Brush dc motors

Disc magnet motors

Can stack motors

Can stack linear actuators

Gearheads

Encoders

Brushless DC Motors

Built for precision, efficiency and reliability, these motors offer the power density needed to deliver top performance in the most compact applications. Available in slotted and slotless designs, they provide exceptional acceleration, speed, torque and position control over a long, trouble-free life.

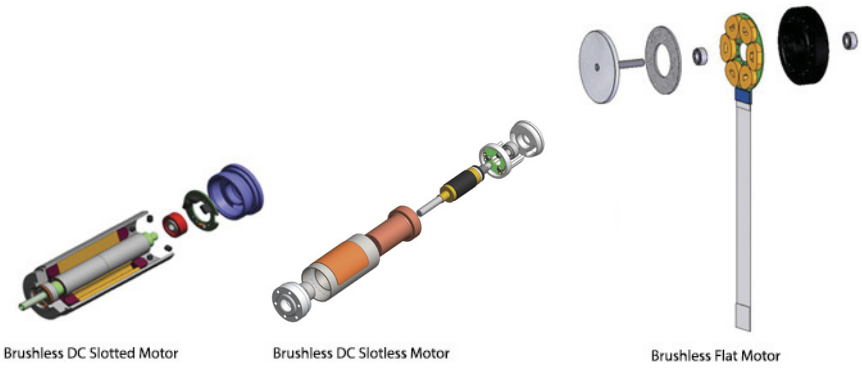

Brushless DC Slotted Motor | Brushless DC Slotless Motor | Brushless Flat Motor

Exceptionally Efficient, Powerful and Durable

Feature	Details	Application Advantages
Slotless or slotted configurations	• Slotless: self-supporting cylindrical coil	• Zero detent torque • Reduced iron losses • High efficiency • Linear torque vs. speed
	• Slotted: coils inserted in the slots of the stator	• Excellent torque-to-power ratio • High current capability • Withstands rugged environments • Autoclavable option
Permanent magnet	• Linear torque/speed curve (except iron losses) • Torque proportional to current • Speed proportional to voltage	• Ease of position and speed control
Brushless design	• Electronic commutation • No brushes to wear or spark	• Long life, limited only by ball bearing wear • Reliable in harsh and dusty environments • Reduced EMI • Quiet operation
Winding attached to stator	• Improved heat dissipation via conduction	• Superior overload capacity
Autoclavable versions for slotted motors	• Motor design optimized to withstand exposure to harsh environments including high temperature and pressure cycling	• Long life in medical devices that undergo frequent sterilization

For a Wide Range of Miniature Motion Needs

Medical devices & clinical diagnostics
- Arthroscopic shavers
- Respiratory and ventilation devices
- Miniature pumps
- Laboratory automation
- Powered ENT instruments
- Surgical robots
- Diagnostic analyzers
- Medical analyzers
- Sample prep workstations
- Powered orthopedic drills and saws
- Powered surgical screwdrivers

Aerospace
- Surveillance camera systems
- Seat actuation
- Valve actuation

Instrumentation
- Dosing & dispensing systems
- Gas detection
- Explosive trace detection systems

Other
- Nailers & framing systems
- Powered industrial fasteners
- Powered assembly screwdrivers
- Powered professional pruners

Meet your Application's Working Point Requirements*

* For Brushless Slotted Working Point Requirements, please refer to chart on page 36.

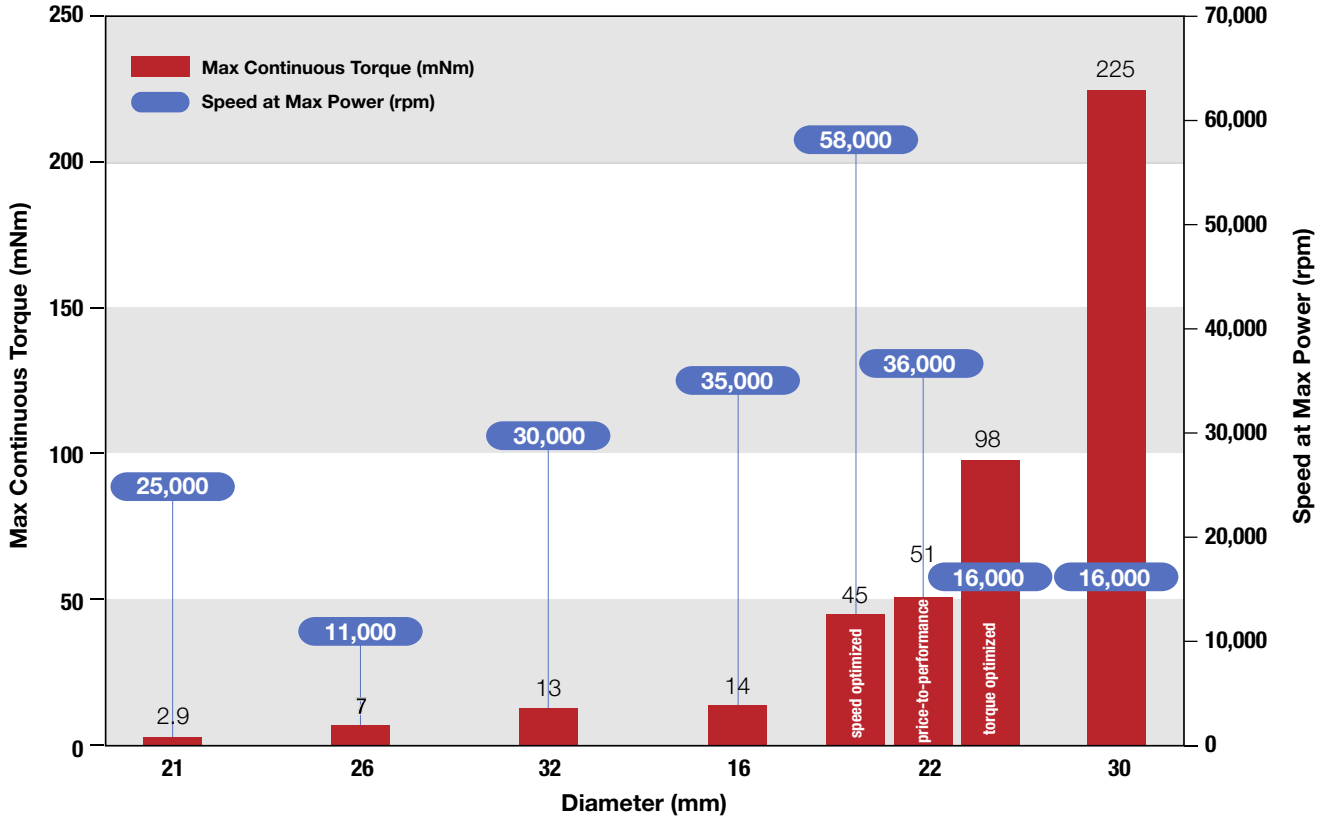

Motor signal sequence shaft rotation CW seen from front face for BH and EC series of slotless BLDC motors, or CCW for BF series

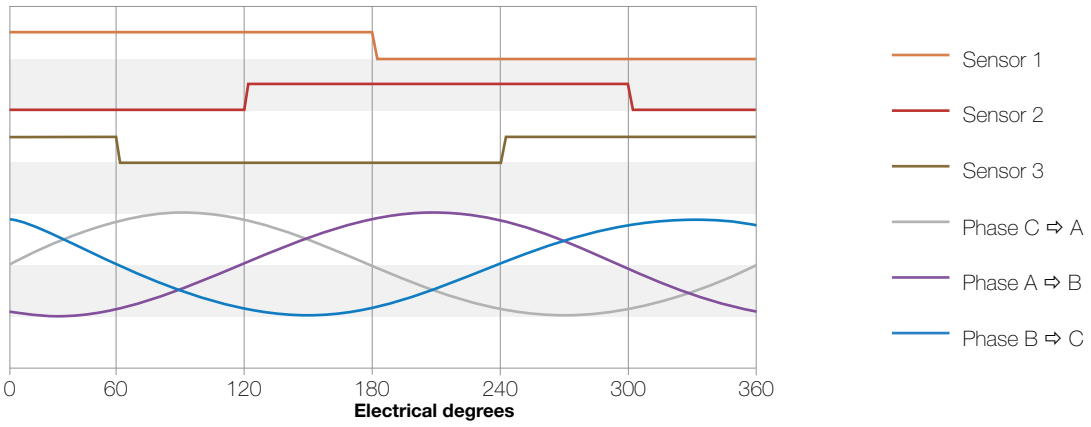

For complete product and application details, visit **portescap.com/brushless**

Glossary (for Brushless Slotless DC Motors)

Electrical Data

Nominal voltage	This voltage is used when measuring no-load speed, no-load current and other parameters. It does not represent a recommended voltage or a limitation of the motor.
Optimization direction	Brushless motors equipped with Hall sensors can be tuned so that the sensor positions compensate for the electrical and electronic time response of the commutation sequence. This is especially important for reducing motor losses in high-speed applications. All the standard motors shown in this catalog are either symmetrical or optimized in the counterclockwise (CCW) direction as seen from the output shaft side of the motor. For optimized motors, optimization speed is mentioned in the specification document. Optimization speed and direction can be customized by request.
No-load speed	This is the motor speed as measured without any attachment or friction on the output shaft, with the driver being supplied by the nominal voltage.
Typical no-load current	This is the average current measured before the driver power stage, without any attachment or friction on the output shaft and with the driver being supplied by the nominal voltage. This parameter can vary significantly depending on the driver used and the motor temperature. All data are measured using the Hall-sensored version of the commutation, when available, after 30 seconds of running the motor at room temperature.
Max continuous mechanical power (@ 25°C)	Within maximum continuous operation specifications (see power curve graph), and with proper selection of speed and torque, this is the highest mechanical power output that can typically be achieved without exceeding the thermal limitation of the motor windings. In some cases, this maximum power can also be limited by the maximum recommended motor speed for the bearing assembly. Maximum continuous power is calculated with the motor in the air at 25°C, with no heat sink or forced air cooling. With improved cooling, it may be possible to exceed this value in short-term operation.
Max continuous current	Within maximum continuous operation specifications (see power curve graph), this is the current drawn at the highest output torque the motor can continuously achieve without exceeding the thermal limitations of the windings. Maximum continuous current is usually reached at a very low speed where iron and friction losses are minimal. This value is calculated with the motor in the air at 25°C, with no heat sink or forced air cooling. With improved cooling, it may be possible to exceed this value in short-term operation. This value does not apply to the very short peak current at startup, which can typically reach several tens of amps.
Max continuous torque	This is the torque corresponding to the maximum continuous current, usually reached at very low speed. Stall torque, when the motor needs to start from a blocked position, may be lower than this figure due to motor torque ripple.

Back EMF constant	Back EMF is a voltage generated by the windings of a permanent magnet motor in rotation. Because this voltage increases with speed and is applied in the opposite direction from the input voltage, the back EMF constant can be used to calculate the motor's speed at any given input voltage, assuming no friction and no loading torque. The specification document also gives the 0-peak value of the back EMF, which is typically higher than the average value and can be measured on motor phases with an oscilloscope while the motor is back-driven.
Torque constant	This value relates the current in the motor phases to the torque created at the rotor level.
Motor regulation R/k^2	This value gives the extra joule losses in the motor winding, in watts, multiplied by the torque squared (Nm^2). A lower number indicates a better magnetic design for dealing with high torques. The calculation is based on internal phase resistance, not including wire soldering and connector resistance.
Motor regulation $k/R^{1/2}$	This is simply another way of expressing the previous property. In this case, a higher number indicates a more efficient magnetic design for dealing with high torques.
Internal resistance - phase to phase	This is the coil phase resistance measured at room temperature before the coil is soldered to the motor circuit assembly.
Line to line resistance at connectors	This is the phase resistance measured for the completed motor at room temperature. It includes solder, wire and (if present) connector resistances. In motors with very low resistance, the line to line resistance may differ significantly from the internal resistance.
Inductance - phase to phase	This is the motor phase inductance measured with an inductance meter at 1000 Hz.
Mechanical time constant	This represents the motor's ability to accelerate quickly at a given voltage and without any current limitation. It typically represents the time needed to reach 63.2% of the motor's final speed under a constant voltage.
Electrical time constant	This is the time constant L/R (inductance divided by resistance) that is needed to properly size the driver PWM frequency. It represents the motor's ability to let the current vary quickly. This value is commonly very low in slotless BLDC motors.

Glossary (for Brushless Slotless DC Motors)

General Data

Maximum motor speed	This is the maximum recommended speed as limited by the bearing assembly type, taking into account the bearing supplier's specification, vibration behavior and other factors.
Ambient working temperature range	The recommended ambient working temperature range is based on the properties of the bearing lubricant.
Ambient storage temperature range	The recommended ambient storage temperature range is based on the properties of the bearing lubricant.
Ball bearings preload	This is the bearing preload force as implemented by design. This might be a static preload in bearings bonded to the shaft after assembly. In that case, it is not possible to measure preload force by applying an external force on the shaft, and there is vey little axial play. To maximize bearing life, we recommend that forces on the shaft during operation do not exceed the preload force.
Axial static force without shaft support (max)	When press-fitting a part onto the shaft without providing support on the opposite end of the shaft, the applied force is supported entirely by the bearing races. This is the maximum pressing force recommended to avoid damage to the bearings.
Maximum winding temperature	This specification is linked to the properties of the thermo-bonding material around the coil copper wires. The maximum winding temperature can be an important consideration for applications that require long product life because operation at high temperatures can lead to failure modes such as fast aging of the bearing lubricant.
Thermal resistance	Thermal resistance is given either directly from the coil to the ambient air surrounding the motor, or in two steps: from coil to housing and then from housing to ambient. This value is calculated with the motor in the air at 25°C, with no heat sink or forced air cooling. With the motor installed, the value is likely to decrease in many applications, but it could also be higher if the motor is surrounded by a small volume of air that cannot cool down. Thermal resistance varies with air convection parameters, and is lower at a high temperature of the motor housing. The value can also vary based on speed, especially with flat motors. This value is measured during operation close to the maximum continuous power zone (see power curve graph).
Thermal time constant	This value is given directly from the coil to the ambient air surrounding the motor. Along with the thermal resistance, the thermal time constant allows for solving thermal differential equations for the motor. It is measured at a constant voltage supply over time, which means the amount of power loss that can be dissipated tends to decrease due to the increase in winding resistance with increasing temperature.
Mass	This is the total motor mass, including cables.
Rotor inertia	This assumes an unconnected rotor and is used to determine angular acceleration for a given torque.
Hall sensor electrical phasing	In a three-phase BLDC motor with Hall sensors, the sensors are commonly phased at 120° electrically from each other. (See the chart to the right for an example.) This affects driver selection.

Additional Information

Balancing	All cylinder motors in this section have their rotors dynamically balanced on two planes through a material removal process.
Hall sensors	An external pull-up resistor is required on drive electronics.
Power curve	The typical power curve shows the continuous operation working points possible (the colored part of the chart). This is based on purely thermal limitations (the same limitations described under “Max continuous current”) that change depending on the cooling conditions of the application – for example, when the motor is mounted to a metal part. These power curves are common to all coils presented, and they represent typical motor performance with the understanding that many parameters influencing the curves have tolerances around nominal values (no-load current, resistance, torque constant, etc.). These power curves are not plotted at nominal voltage; each working point illustrated will require matching of coil, voltage and load to reach the indicated speed. Dotted lines show the torque/speed relationships that deliver a given mechanical power value (in watts) at the motor shaft. Working points outside of the illustrated continuous operation range are possible depending on the duty cycle. In some cases, the power curve stops early on the high-speed side before the limitation is reached (the flat portion on top of the curve) because measurement was not possible at higher speeds. In some cases, the maximum recommended motor speed is lower than the maximum continuous thermal limit shown on the power curve. This recommendation is based on characteristics of the bearing assembly.
Dielectric test	A dielectric test (also known as hipot or high potential test) is performed on all motors under 500V phases to the housing and during 5 seconds after voltage ramp up. Maximum allowed leakage is 1mA.

16BHS 2-wires

Ø 16 mm • 2-pole • 6 W

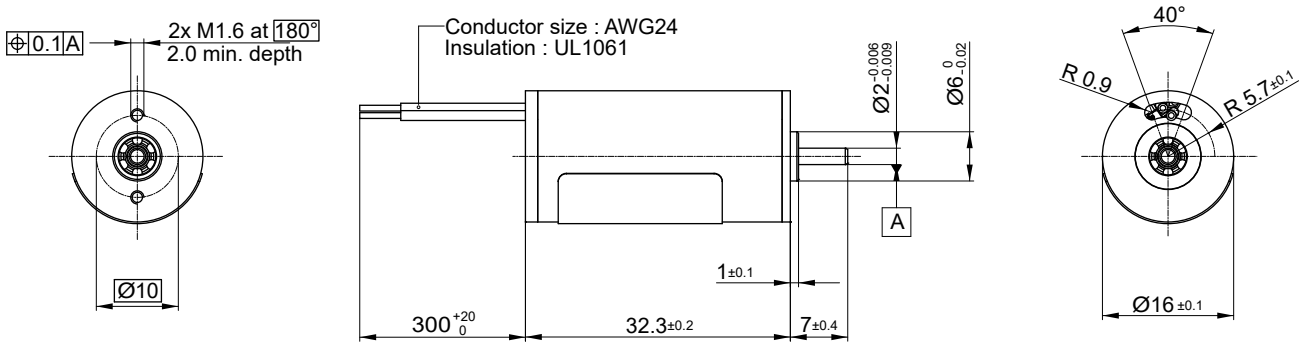

Dimensions in mm.

Electrical Data		Symbol	16BHS 2A-xxx.01 E	L	P	T	Unit
1	Nominal Voltage	U_N	12	12	12	12	Volt
2	Optimization Direction	-	n.a.	n.a.	n.a.	n.a.	-
3	No Load Speed	n_0	8,740	12,740	17,100	33,770	rpm
4	Typical No Load Current	I_0	55.0	75.0	112.0	235.0	mA
5	Max. Continuous Mechanical Power (@25°C)	P_{max}	6.0	6.0	6.0	6.0	W
6	Max. Continuous Current	$I_{e\,max}$	0.3	0.4	0.6	1.2	A
7	Max. Continuous Torque	$M_{e\,max}$	3.8 (0.54)	3.6 (0.51)	4 (0.57)	4 (0.57)	mNm (oz-in)
8	Back EMF Constant	k_E	1.19	0.84	0.65	0.34	V/1000 rpm
9	Torque Constant	k_M	11.4	8.1	6.2	3.3	mNm/A
10	Motor Regulation	R/k^2	225.5	251.5	205.5	192.8	10^3/Nms
11	Motor Regulation	$k/R^{½}$	2.1 (0.3)	2 (0.29)	2.2 (0.32)	2.2 (0.32)	mNm/W^{½} (oz-in/W^{½})
12	Internal Resistance - phase to phase	R_l	29.30	16.50	7.90	2.10	ohms
13	Line to Line Resistance at Connectors	R_L	n.a.	n.a.	n.a.	n.a.	ohms
14	Inductance Phase to Phase	L	1.17	0.66	0.32	0.08	mH
15	Mechanical Time Constant	τ_m	11.8	13.2	10.7	10.3	ms
16	Electrical Time Constant	τ_e	0.04	0.04	0.04	0.04	ms

General Data				
17	Maximum Motor Speed	n_{max}	10,900	rpm
18	Ambient Working Temperature Range	-	-30 to + 80 (-22 to + 176)	°C (°F)
19	Ambient Storage Temperature Range	-	-40 to + 80 (-40 to + 176)	°C (°F)
20	Ball Bearings Preload	-	2.0	N
21	Axial Static Force w/o Shaft Support (max)	-	25.0	N
22	Maximum Winding Temperature	-	125 (257)	°C (°F)
23	Thermal Resistance	R_{th}	22.0	°C/W
24	Thermal Time Constant	τ_w	520	s
25	Weight	-	33 (1.17)	g (oz)
26	Rotor Inertia	J	0.500	g-cm^2
27	Hall Sensor Electrical Phasing	-	NA	Electrical °

Wire	Description
Red	VCC
Black	GND

3.5-15V DC for E,L,P windings
3.5-5V DC for T winding
2.6A max - do not reverse polarity

When ordering, please choose CW or CCW for rotation direction seen from shaft output side

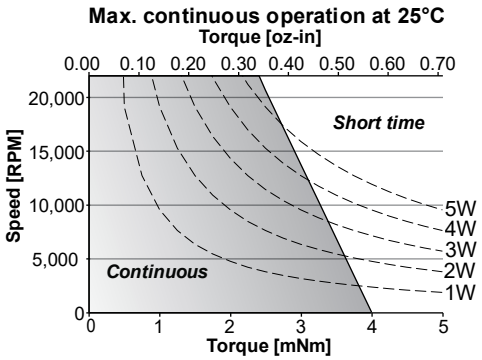

V092020 • © 2020 Portescap. Specifications subject to change without notice.

16ECP36 Ultra EC™

Ø 16 mm • 2-pole • 27 W

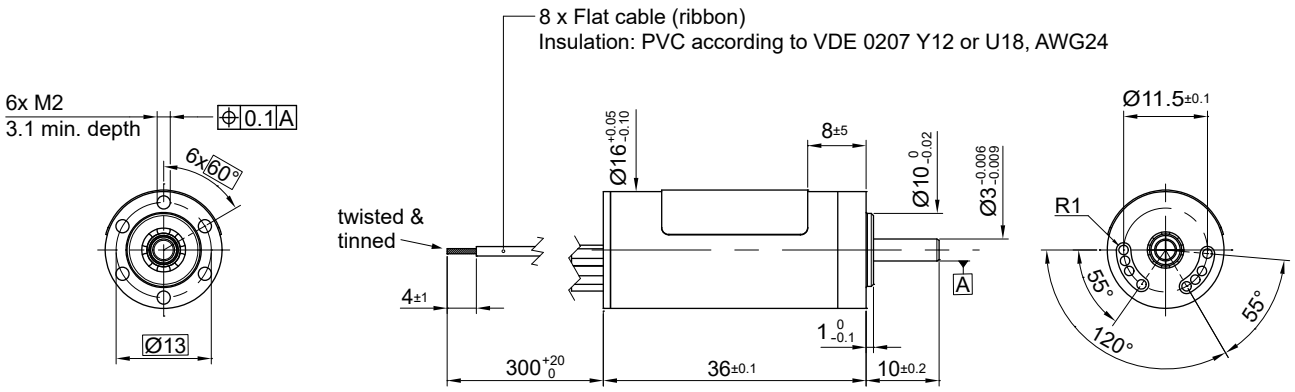

Dimensions in mm.

Electrical Data		Symbol	16ECP36-8B-xxx.01 380	245	108	49	Unit
1	Nominal Voltage	U_N	24	24	24	12	Volt
2	Optimization Direction	-	Symmetrical	Symmetrical	Symmetrical	Symmetrical	-
3	No Load Speed	n_0	8,100	12,420	29,000	31,550	rpm
4	Typical No Load Current	I_0	20	35	85	160	mA
5	Max Continuous Mechanical Power (@25°C)	P_{max}	27.5	27.5	27.5	27.5	W
6	Max Continuous Current	$I_{e\,max}$	0.3	0.4	0.9	2.1	A
7	Max Continuous Torque	$M_{e\,max}$	7.0 (1)	7.2 (1.02)	7.1 (1.01)	7.5 (1.07)	mNm (oz-in)
8	Back EMF Constant	k_E	2.82	1.84	0.80	0.37	V/1000 rpm
9	Torque Constant	k_M	26.9	17.6	7.7	3.5	mNm/A
10	Motor Regulation	R/k^2	71.8	67.9	69.2	62.4	10^3/Nms
11	Motor Regulation	$k/R^{½}$	3.7 (0.53)	3.8 (0.54)	3.8 (0.54)	4 (0.57)	mNm/W^{½} (oz-in/W^{½})
12	Internal Resistance - phase to phase	R_l	52.00	21.00	4.05	0.78	ohms
13	Line to Line Resistance at Connectors	R_L	52.10	21.10	4.13	0.82	ohms
14	Inductance Phase to Phase	L	3.93	1.63	0.32	0.07	mH
15	Mechanical Time Constant	τ_m	3.9	3.7	3.8	3.4	ms
16	Electrical Time Constant	τ_e	0.08	0.08	0.08	0.08	ms

General Data				
17	Maximum Motor Speed	n_{max}	63,000	rpm
18	Ambient Working Temperature Range	-	-30 to + 100 (-22 to + 212)	°C (°F)
19	Ambient Storage Temperature Range	-	-40 to + 100 (-40 to + 212)	°C (°F)
20	Ball Bearings Preload	-	5.3	N
21	Axial Static Force w/o Shaft Support (max)	-	34	N
22	Maximum Winding Temperature	-	125 (257)	°C (°F)
23	Thermal Resistance	R_{th}	3.5 / 17	°C/W
24	Thermal Time Constant	τ_w	580	s
25	Weight	-	41 (1.45)	g (oz)
26	Rotor Inertia	J	0.60	g-cm^2
27	Hall Sensor Electrical Phasing*	-	120	Electrical °

*Available without hall sensor

Wire	Description
Gray	Phase 1
Violet	Phase 2
Blue	Phase 3
Green	3.5 to 24V DC
Yellow	GND
Orange	Sensor 1
Red	Sensor 2
Brown	Sensor 3
with hall effect sensor	

No load speed for each coil

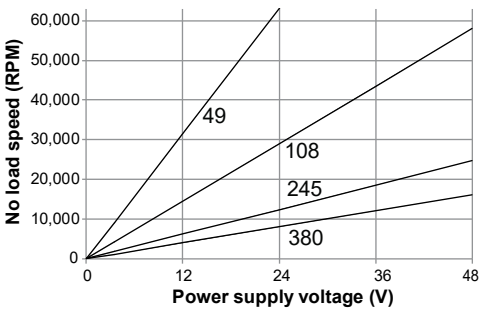

Max. continuous operation at 25°C

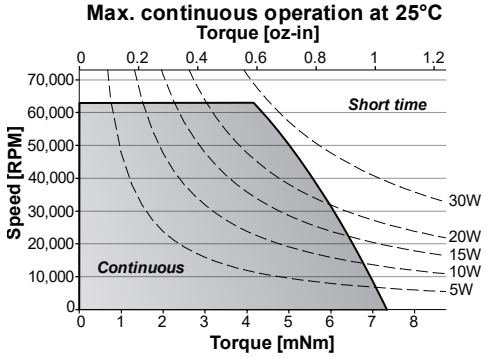

16ECP36 2-Wire Ultra EC™

Ø 16 mm • 2-pole • 19 W

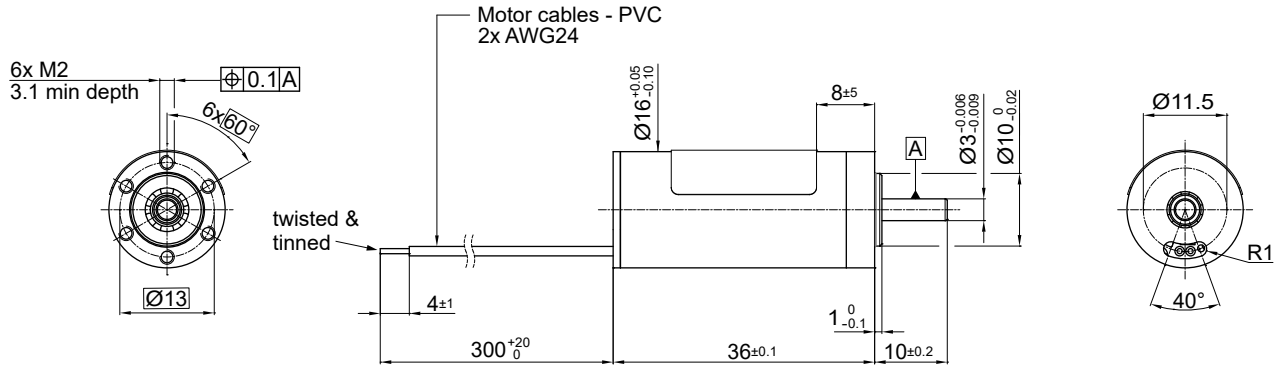

Dimensions in mm.

Electrical Data	Symbol	16ECP36-2A-** 49	108	245	380	Unit
1 Nominal Voltage	U_N	12	12	12	12	Volt
2 Optimization Direction	-	CW	CW	CW	CW	-
3 No Load Speed	n_0	31,550	14,500	6,200	4,050	rpm
4 Typical No Load Current	I_0	160	80	30	15	mA
5 Max Continuous Mechanical Power (@25°C)	P_{max}	19	9	2	1	W
6 Max Continuous Current	$I_{e\,max}$	1.80	0.90	0.40	0.30	A
7 Max Continuous Torque	$M_{e\,max}$	7.0 (1)	6.7 (0.95)	6.75 (0.96)	6.75 (0.96)	mNm (oz-in)
8 Back EMF Constant	k_E	0.39	0.84	1.93	2.96	V/1000 rpm
9 Torque Constant	k_M	3.5	7.7	17.6	26.9	mNm/A
10 Motor Regulation	R/k^2	55.4	69.2	67.9	71.9	10^3/Nms
11 Motor Regulation	$k/R^{½}$	4.2 (0.61)	3.8 (0.54)	3.8 (0.55)	3.7 (0.53)	mNm/$W^{½}$ (oz-in/$W^{½}$)
12 Internal Resistance - phase to phase	R_I	0.69	4.05	21.00	52.00	ohms
13 Line to Line Resistance at Connectors	R_L	NA	NA	NA	NA	ohms
14 Inductance Phase to Phase	L	0.07	0.32	1.63	3.93	mH
15 Mechanical Time Constant	τ_m	3.0	3.8	3.7	3.9	ms
16 Electrical Time Constant	τ_e	0.09	0.08	0.08	0.8	ms
General Data						
17 Maximum Motor Speed	n_{max}	39,000	18,000	8,000	5,000	rpm
18 Ambient Working Temperature Range	-	-30 to + 100 (-22 to + 212)				°C (°F)
19 Ambient Storage Temperature Range	-	-40 to + 100 (-40 to + 212)				°C (°F)
20 Ball Bearings Preload	-	5.3				N
21 Axial Static Force w/o Shaft Support (max)	-	34				N
22 Maximum Winding Temperature	-	125 (257)				°C (°F)
23 Thermal Resistance	R_{th}	3.5 / 17				°C/W
24 Thermal Time Constant	τ_w	587				s
25 Weight	-	41 (1.45)				g (oz)
26 Rotor Inertia	J	0.60				g-cm^2
27 Hall Sensor Electrical Phasing*	-	NA				Electrical °

*Available without hall sensor

Wire	Description
Red	5 to 15V DC
Black	GND

A reverse polarity will damage the electronics permanently

PWM not allowed on power supply

When ordering, please choose CW or CCW for rotation direction seen from shaft output side

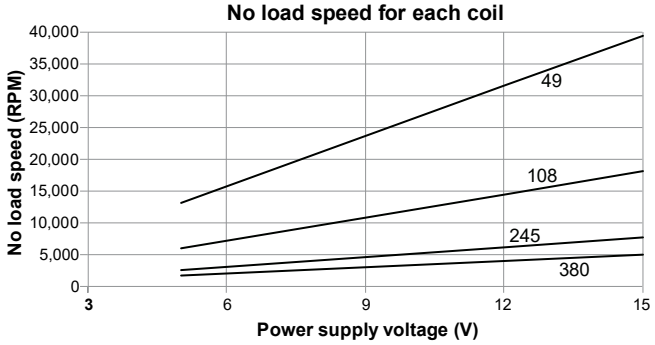

Power curves on following page

V092020 • © 2020 Portescap. Specifications subject to change without notice.

16ECP36 2A CW 49

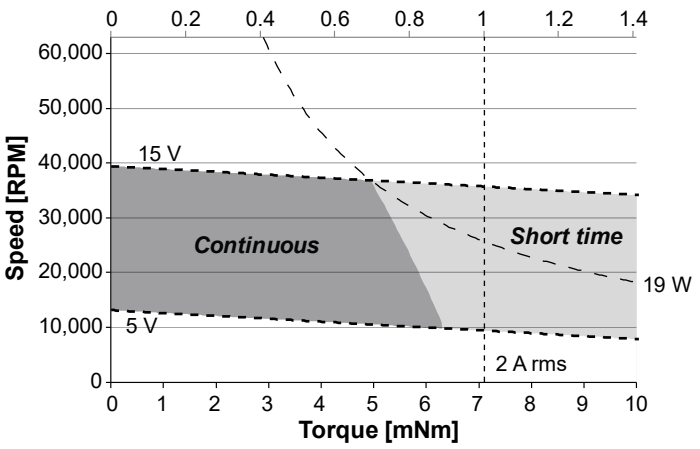

16ECP36 2A CW 108

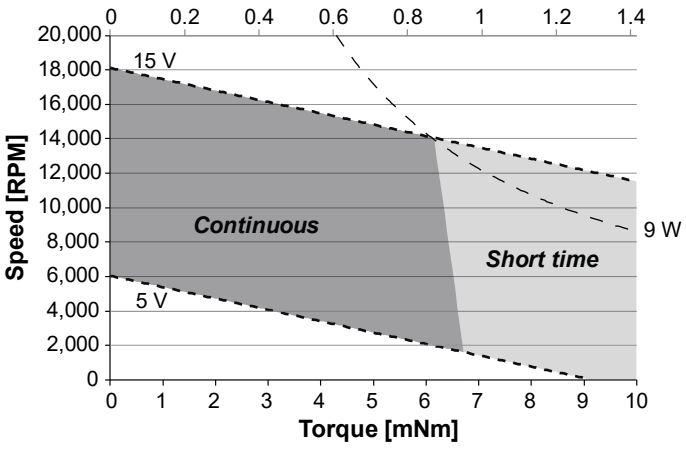

16ECP36 2A CW 245

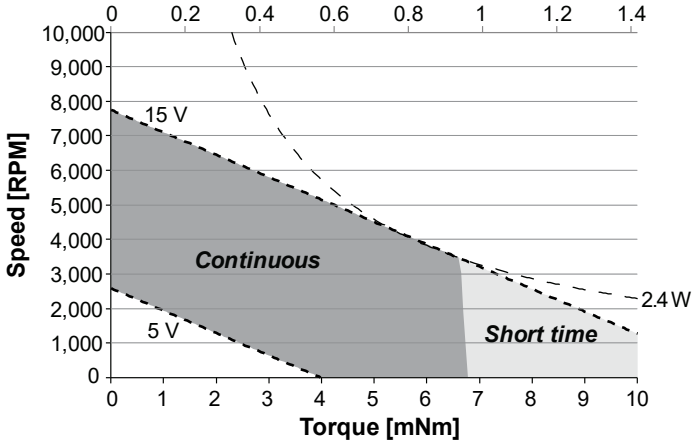

16ECP36 2A CW 380

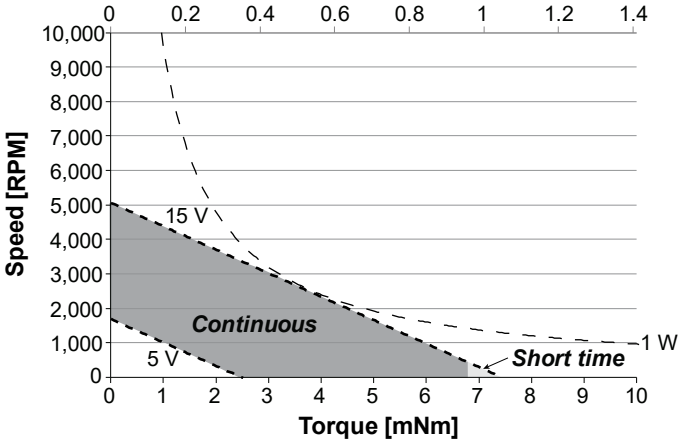

16ECP52 Ultra EC™

Ø 16 mm • 2-pole • 37 W

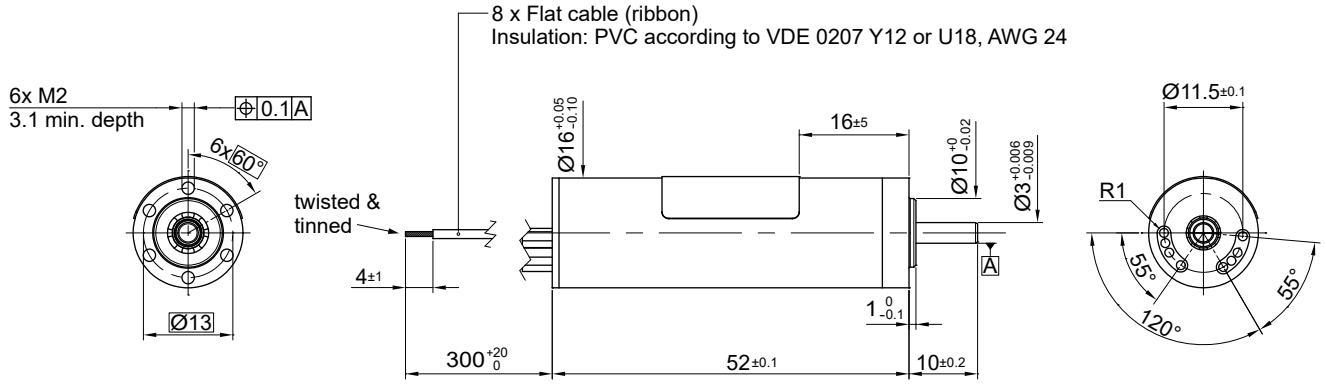

Dimensions in mm.

Electrical Data		Symbol	16ECP52-8B-xxx.01			Unit
			220	112	49	
1	Nominal Voltage	U_N	24	24	24	Volt
2	Optimization Direction	-	Symmetrical	Symmetrical	Symmetrical	-
3	No Load Speed	n_0	6,144	12,100	27,800	rpm
4	Typical No Load Current	I_0	19	41	134	mA
5	Max. Continuous Mechanical Power (@25°C)	P_{max}	37.5	37.5	37.5	W
6	Max. Continuous Current	$I_{e\,max}$	0.4	0.8	2.0	A
7	Max. Continuous Torque	$M_{e\,max}$	14.5 (2.06)	14.7 (2.09)	16.1 (2.28)	mNm (oz-in)
8	Back EMF Constant	k_E	3.77	1.93	0.84	V/1000 rpm
9	Torque Constant	k_M	36.0	18.4	8.0	mNm/A
10	Motor Regulation	R/k^2	18.9	18.3	15.4	10^3/Nms
11	Motor Regulation	$k/R^{½}$	7.3 (1.04)	7.4 (1.05)	8.1 (1.15)	mNm/W^{½} (oz-in/W^{½})
12	Internal Resistance - phase to phase	R_l	24.50	6.20	0.98	ohms
13	Line to Line Resistance at Connectors	R_L	24.60	6.30	1.06	ohms
14	Inductance Phase to Phase	L	2.32	0.60	0.12	mH
15	Mechanical Time Constant	τ_m	1.9	1.8	1.5	ms
16	Electrical Time Constant	τ_e	0.10	0.10	0.12	ms

General Data				
17	Maximum Motor Speed	n_{max}	40,000	rpm
18	Ambient Working Temperature Range	-	-30 to + 100 (-22 to + 212)	°C (°F)
19	Ambient Storage Temperature Range	-	-40 to + 100 (-40 to + 212)	°C (°F)
20	Ball Bearings Preload	-	5.3	N
21	Axial Static Force w/o Shaft Support (max)	-	34	N
22	Maximum Winding Temperature	-	125 (257)	°C (°F)
23	Thermal Resistance	R_{th}	3 / 15	°C/W
24	Thermal Time Constant	τ_w	750	s
25	Weight	-	62 (2.19)	g (oz)
26	Rotor Inertia	J	1	g-cm^2
27	Hall Sensor Electrical Phasing*	-	120	Electrical °

*Available without hall sensor

Wire	Description
Gray	Phase 1
Violet	Phase 2
Blue	Phase 3
Green	3.5 to 24V DC
Yellow	GND
Orange	Sensor 1
Red	Sensor 2
Brown	Sensor 3
with hall effect sensor	

No load speed for each coil

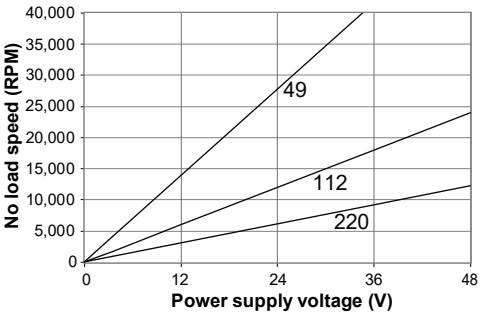

Max. continuous operation at 25°C

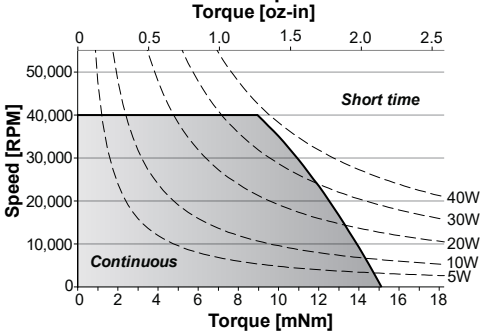

V092020 • © 2020 Portescap. Specifications subject to change without notice.

16ECP52 2-Wire Ultra EC™

Ø 16 mm • 2-pole • 19 W

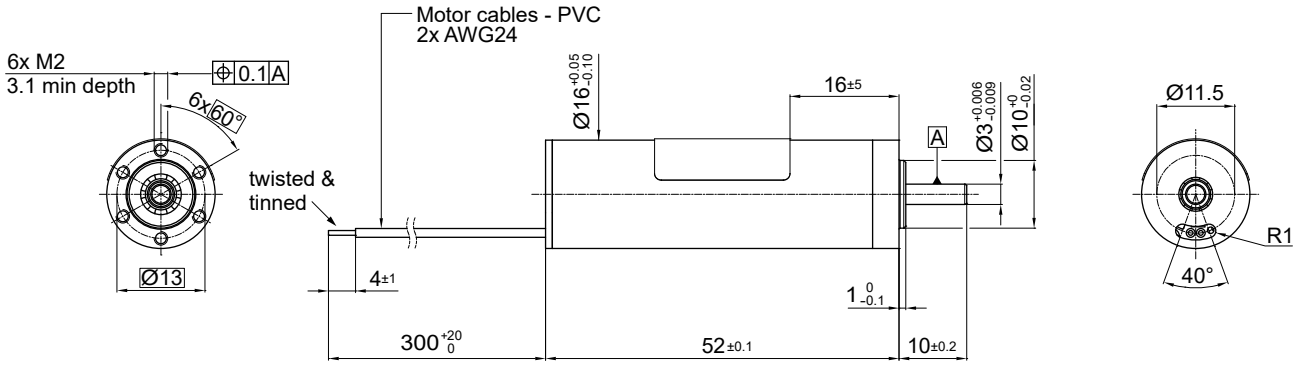

Dimensions in mm.

Electrical Data	Symbol	16ECP52-2A-** 49	112	220	Unit
1 Nominal Voltage	U_N	12	12	12	Volt
2 Optimization Direction	-	CW	CW	CW	-
3 No Load Speed	n_0	14,100	5,900	3,070	rpm
4 Typical No Load Current	I_0	120	35	15	mA
5 Max Continuous Mechanical Power (@25°C)	P_{max}	19.3	7.3	2.1	W
6 Max Continuous Current	$I_{e\,max}$	1.70	0.72	0.39	A
7 Max Continuous Torque	$M_{e\,max}$	13.4 (1.9)	13.9 (1.97)	13.93 (1.98)	mNm (oz-in)
8 Back EMF Constant	k_E	0.88	2.11	3.95	V/1000 rpm
9 Torque Constant	k_M	7.99	19.2	35.99	mNm/A
10 Motor Regulation	R/k^2	15.35	16.68	18.94	10^3/Nms
11 Motor Regulation	$k/R^{½}$	8 (1.15)	7.7 (1.1)	7.2 (1.03)	mNm/W^{½} (oz-in/W^{½})
12 Internal Resistance - phase to phase	R_l	0.98	6.15	24.53	ohms
13 Line to Line Resistance at Connectors	R_L	NA	NA	NA	ohms
14 Inductance Phase to Phase	L	0.12	0.60	2.32	mH
15 Mechanical Time Constant	τ_m	1.5	1.7	1.9	ms
16 Electrical Time Constant	τ_e	0.12	0.1	0.1	ms
General Data					
17 Maximum Motor Speed	n_{max}	15,900	7,000	4,000	rpm
18 Ambient Working Temperature Range	-	-30 to + 100 (-22 to + 212)			°C (°F)
19 Ambient Storage Temperature Range	-	-40 to + 100 (-40 to + 212)			°C (°F)
20 Ball Bearings Preload	-	5.3			N
21 Axial Static Force w/o Shaft Support (max)	-	34			N
22 Maximum Winding Temperature	-	125 (257)			°C (°F)
23 Thermal Resistance	R_{th}	3 / 15			°C/W
24 Thermal Time Constant	τ_w	759			s
25 Weight	-	62 (2.19)			g (oz)
26 Rotor Inertia	J	1			g-cm^2
27 Hall Sensor Electrical Phasing*	-	NA			Electrical °

*Available without hall sensor

Wire	Description
Red	5 to 15V DC
Black	GND

A reverse polarity will damage the electronics permanently

PWM not allowed on power supply

When ordering, please choose CW or CCW for rotation direction seen from shaft output side

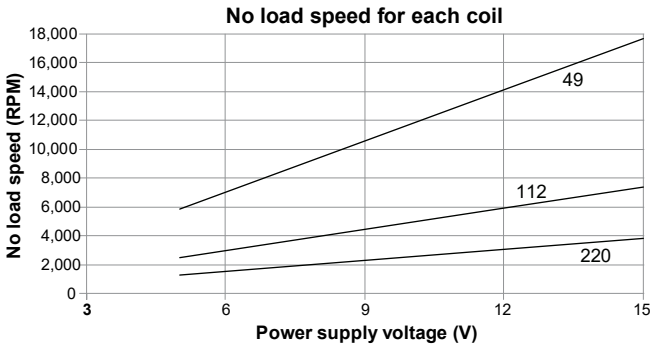

Power curves on following page

16ECP52 2A CW 49

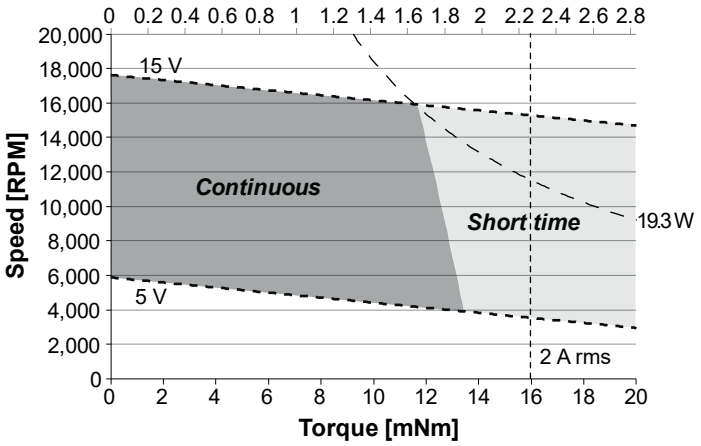

16ECP52 2A CW 112

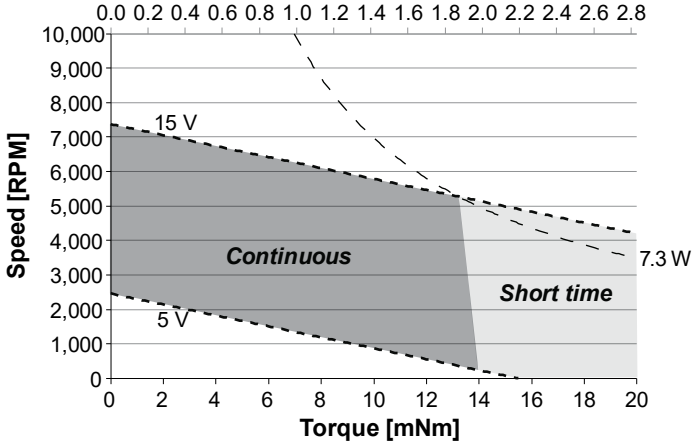

16ECP52 2A CW 220

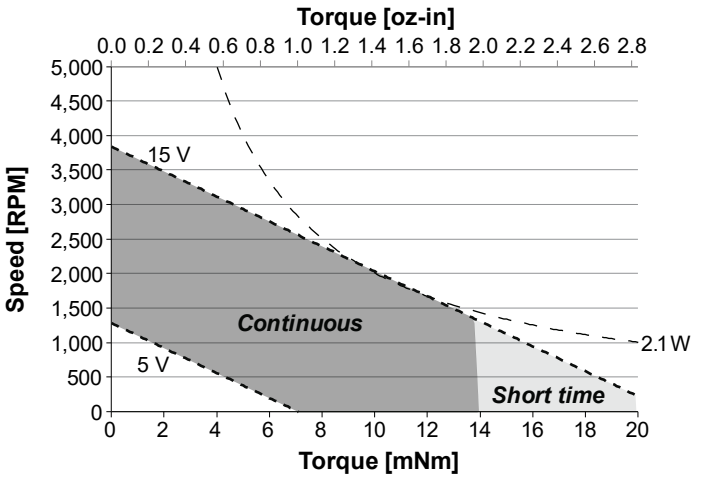

V09 2020 • © 2020 Portescap. Specifications subject to change without notice.

21BF NuvoDisc™

Ø 21 mm • 8-pole • 4 W

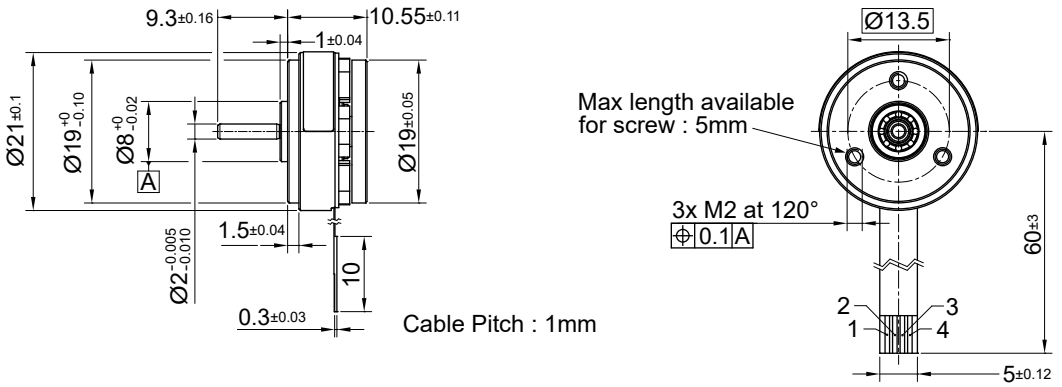

Dimensions in mm.

Electrical Data	Symbol	21BF 3C-K.02	Unit
1 Nominal Voltage	U_N	5	Volt
2 Optimization Direction	-	n.a.	-
3 No Load Speed	n_0	3,900	rpm
4 Typical No Load Current	I_0	28.0	mA
5 Max Continuous Mechanical Power (@25°C)	P_{max}	4.0	W
6 Max Continuous Current	$I_{e\,max}$	0.3	A
7 Max Continuous Torque	$M_{e\,max}$	2.7 (0.39)	mNm (oz-in)
8 Back EMF Constant	k_E	0.89	V/1000 rpm
9 Torque Constant	k_M	8.5	mNm/A
10 Motor Regulation	R/k^2	784.0	10^3/Nms
11 Motor Regulation	$k/R^{½}$	1.1 (0.16)	mNm/W^{½} (oz-in/W^{½})
12 Internal Resistance - phase to phase	R_l	56.30	ohms
13 Line to Line Resistance at Connectors	R_L	56.30	ohms
14 Inductance Phase to Phase	L	1.22	mH
15 Mechanical Time Constant	τ_m	141.2	ms
16 Electrical Time Constant	τ_e	0.02	ms
General Data			
17 Maximum Motor Speed	n_{max}	25000	rpm
18 Ambient Working Temperature Range	-	-30 to +80 (-22 to +176)	°C (°F)
19 Ambient Storage Temperature Range	-	-40 to +80 (-40 to +176)	°C (°F)
20 Ball Bearings Preload	-	2.70	N
21 Axial Static Force w/o Shaft Support (max)	-	27.00	N
22 Maximum Winding Temperature	-	125 (257)	°C (°F)
23 Thermal Resistance	R_{th}	12.00	°C/W
24 Thermal Time Constant	τ_w	200.00	s
25 Weight	-	10 (0.36)	g (oz)
26 Rotor Inertia	J	1.80	g-cm^2
27 Hall Sensor Electrical Phasing (Sensorless)	-	NA	Electrical °

Wire	Description
1	center point of Y winding
2	Phase 1
3	Phase 2
4	Phase 3
sensorless (3C)	

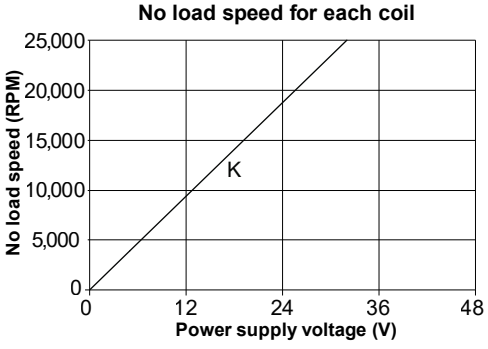

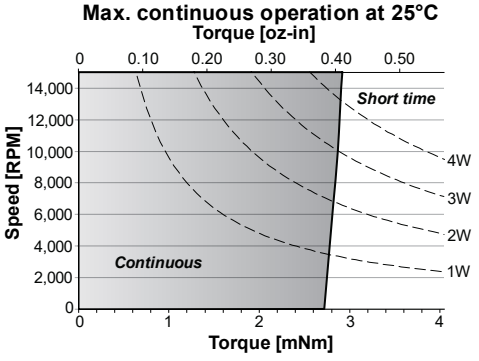

22ECP35 Ultra EC™

Ø 22 mm • 2-pole • 55 W

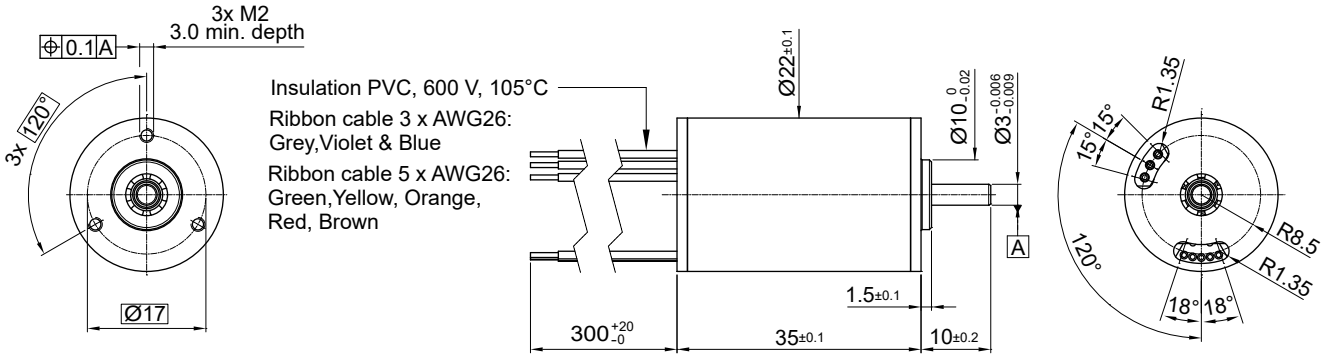

Dimensions in mm.

Electrical Data	Symbol	22ECP35 8B-184.01	Unit
1 Nominal Voltage	U_N	24	Volt
2 Optimization Direction	-	Symmetrical	-
3 No Load Speed	n_0	13,200	rpm
4 Typical No Load Current	I_0	30.0	mA
5 Max. Continuous Mechanical Power (@25°C)	P_{max}	56.0	W
6 Max. Continuous Current	$I_{e\,max}$	0.8	A
7 Max. Continuous Torque	$M_{e\,max}$	14.3 (2.03)	mNm (oz-in)
8 Back EMF Constant	k_E	1.82	V/1000 rpm
9 Torque Constant	k_M	17.4	mNm/A
10 Motor Regulation	R/k^2	21.8	10^3/Nms
11 Motor Regulation	$k/R^{½}$	6.77 (0.96)	mNm/W^{½} (oz-in/W^{½})
12 Internal Resistance - phase to phase	R_l	6.58	ohms
13 Line to Line Resistance at Connectors	R_L	6.71	ohms
14 Inductance Phase to Phase	L	0.89	mH
15 Mechanical Time Constant	τ_m	3.0	ms
16 Electrical Time Constant	τ_e	0.14	ms
General Data			
17 Maximum Motor Speed	n_{max}	50000	rpm
18 Ambient Working Temperature Range	-	-30 to + 100 (-22 to + 212)	°C (°F)
19 Ambient Storage Temperature Range	-	-40 to + 100 (-40 to + 212)	°C (°F)
20 Ball Bearings Preload	-	5.50	N
21 Axial Static Force w/o Shaft Support (max)	-	34.00	N
22 Maximum Winding Temperature	-	125 (257)	°C (°F)
23 Thermal Resistance	R_{th}	3.5/12.5	°C/W
24 Thermal Time Constant	τ_w	550	s
25 Weight	-	64 (2.26)	g (oz)
26 Rotor Inertia	J	1.38	g-cm^2
27 Hall Sensor Electrical Phasing*	-	120.00	Electrical °

*Available without hall sensor

Wire	Description
Gray	Phase 1
Violet	Phase 2
Blue	Phase 3
Green	3.5 to 24V DC
Yellow	GND
Orange	Sensor 1
Red	Sensor 2
Brown	Sensor 3
with hall effect sensor	

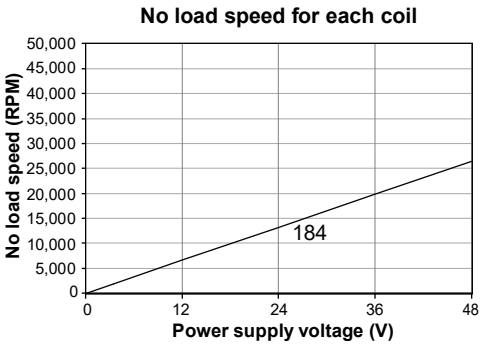

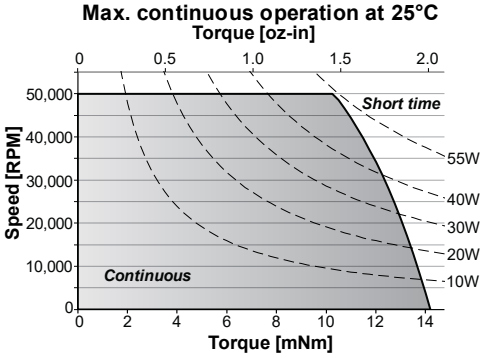

V092020 • © 2020 Portescap. Specifications subject to change without notice.

22ECP45 Ultra EC™

Ø 22 mm • 2-pole • 80 W

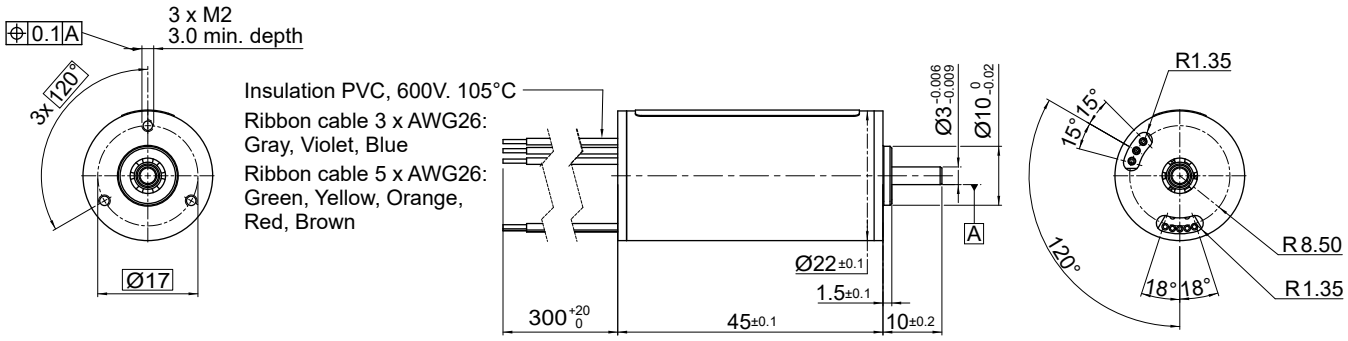

Dimensions in mm.

Electrical Data	Symbol	22ECP45-8B-xxx.01		Unit
		154	82	
1 Nominal Voltage	U_N	24	24	Volt
2 Optimization Direction	-	Symmetrical	Symmetrical	-
3 No Load Speed	n_0	8,370	15,700	rpm
4 Typical No Load Current	I_0	25	60	mA
5 Max Continuous Mechanical Power (@25°C)	P_{max}	80	80	W
6 Max Continuous Current	$I_{e\,max}$	1.0	2.0	A
7 Max Continuous Torque	$M_{e\,max}$	27.7 (3.93)	29.4 (4.17)	mNm (oz-in)
8 Back EMF Constant	k_E	2.82	1.53	V/1000 rpm
9 Torque Constant	k_M	27.0	14.6	mNm/A
10 Motor Regulation	R/k^2	8.0	7.0	10^3/Nms
11 Motor Regulation	$k/R^{½}$	11.2 (1.59)	11.9 (1.69)	mNm/W^{½} (oz-in/W^{½})
12 Internal Resistance - phase to phase	R_l	5.80	1.50	ohms
13 Line to Line Resistance at Connectors	R_L	5.89	1.59	ohms
14 Inductance Phase to Phase	L	0.94	0.27	mH
15 Mechanical Time Constant	τ_m	1.8	1.6	ms
16 Electrical Time Constant	τ_e	0.16	0.18	ms
General Data				
17 Maximum Motor Speed	n_{max}	47,000		rpm
18 Ambient Working Temperature Range	-	-30 to + 100 (-22 to + 212)		°C (°F)
19 Ambient Storage Temperature Range	-	-40 to + 100 (-40 to + 212)		°C (°F)
20 Ball Bearings Preload	-	5.5		N
21 Axial Static Force w/o Shaft Support (max)	-	34		N
22 Maximum Winding Temperature	-	125 (257)		°C (°F)
23 Thermal Resistance	R_{th}	2/9.7		°C/W
24 Thermal Time Constant	τ_w	850		s
25 Weight	-	100 (3.53)		g (oz)
26 Rotor Inertia	J	2.30		g-cm^2
27 Hall Sensor Electrical Phasing*	-	120		Electrical °

*Available without hall sensor

Wire	Description
Gray	Phase 1
Violet	Phase 2
Blue	Phase 3
Green	3.5 to 24V DC
Yellow	GND
Orange	Sensor 1
Red	Sensor 2
Brown	Sensor 3
with hall effect sensor	

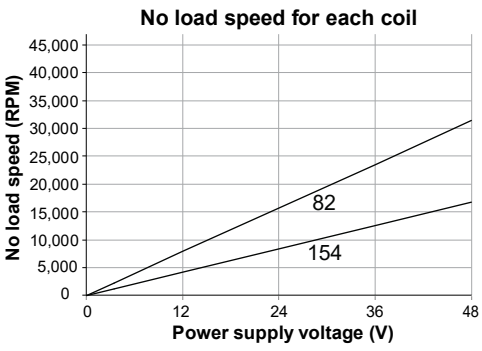

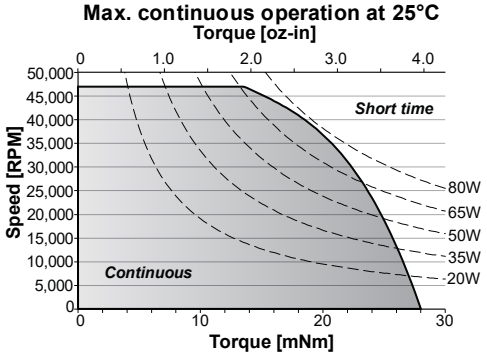

22ECP60 Ultra EC™

Ø 22 mm • 2-pole • 120 W

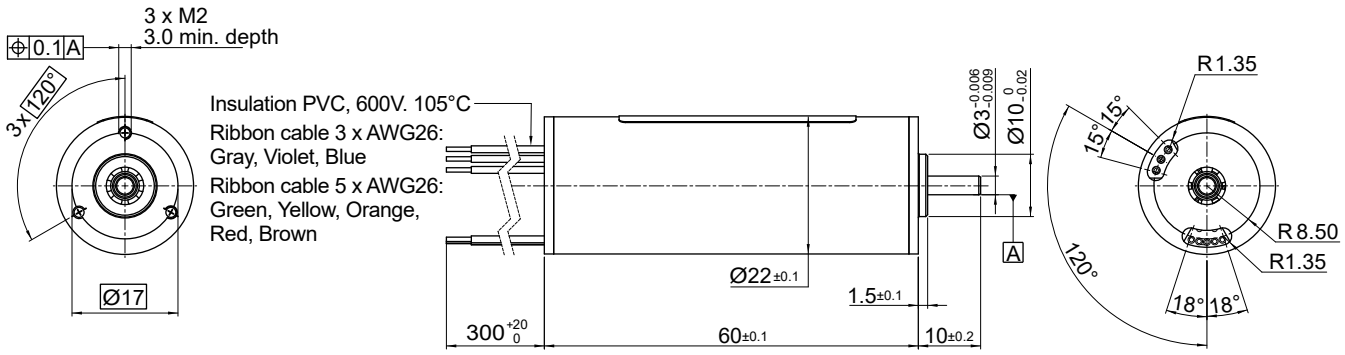

Dimensions in mm.

Electrical Data		Symbol	22ECP60 8B-90.01	Unit
1	Nominal Voltage	U_N	24	Volt
2	Optimization Direction	-	Symmetrical	-
3	No Load Speed	n_0	8,050	rpm
4	Typical No Load Current	I_0	40	mA
5	Max. Continuous Mechanical Power (@25°C)	P_{max}	120	W
6	Max. Continuous Current	$I_{e\,max}$	1.8	A
7	Max. Continuous Torque	$M_{e\,max}$	50.5 (7.16)	mNm (oz-in)
8	Back EMF Constant	k_E	2.96	V/1000 rpm
9	Torque Constant	k_M	28.3	mNm/A
10	Motor Regulation	R/k^2	3.0	10^3/Nms
11	Motor Regulation	$k/R^{½}$	18.3 (2.6)	mNm/$W^{½}$ (oz-in/$W^{½}$)
12	Internal Resistance - phase to phase	R_l	2.38	ohms
13	Line to Line Resistance at Connectors	R_L	2.47	ohms
14	Inductance Phase to Phase	L	0.48	mH
15	Mechanical Time Constant	τ_m	1.0	ms
16	Electrical Time Constant	τ_e	0.20	ms
General Data				
17	Maximum Motor Speed	n_{max}	38000	rpm
18	Ambient Working Temperature Range	-	-30 to + 100 (-22 to + 212)	°C (°F)
19	Ambient Storage Temperature Range	-	-40 to + 100 (-40 to + 212)	°C (°F)
20	Ball Bearings Preload	-	5.50	N
21	Axial Static Force w/o Shaft Support (max)	-	34	N
22	Maximum Winding Temperature	-	125 (257)	°C (°F)
23	Thermal Resistance	R_{th}	1/8.4	°C/W
24	Thermal Time Constant	τ_w	1100	s
25	Weight	-	140 (4.94)	g (oz)
26	Rotor Inertia	J	3.5	g-cm^2
27	Hall Sensor Electrical Phasing*	-	120	Electrical °

*Available without hall sensor

Wire	Description
Gray	Phase 1
Violet	Phase 2
Blue	Phase 3
Green	3.5 to 24V DC
Yellow	GND
Orange	Sensor 1
Red	Sensor 2
Brown	Sensor 3
with hall effect sensor	

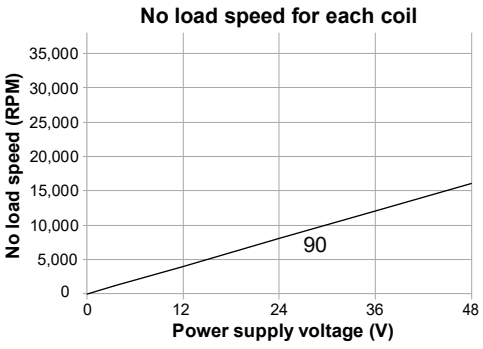

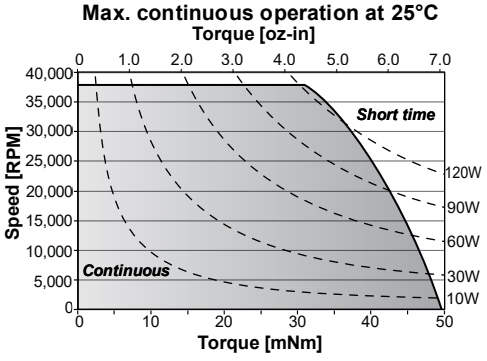

V092020 • © 2020 Portescap. Specifications subject to change without notice.

22ECS45 Ultra EC™

Ø 22 mm • 2-pole • 120 W

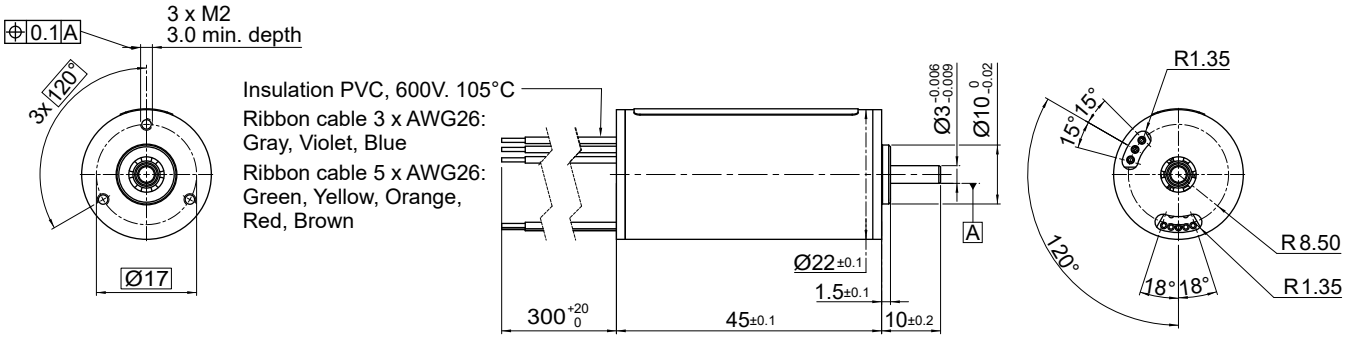

Dimensions in mm.

Electrical Data		Symbol	22ECS45-10B-xxx.01				Unit
			38	30	24	18	
1	Nominal Voltage	U_N	24	24	24	24	Volt
2	Optimization Direction	-	CCW	CCW	CCW	CCW	-
3	No-Load Speed	n_0	34,500	43,500	51,600	68,500	rpm
4	Typical No-Load Current	I_0	160	195	240	300	mA
5	Max Continuous Mechanical Power (@25°C)	P_{max}	120	120	120	120	W
6	Max Continuous Current	$I_{e\,max}$	4.0	5.2	6.4	8.2	A
7	Max Continuous Torque	$M_{e\,max}$	26.6 (3.77)	26.8 (3.8)	26.7 (3.79)	26.8 (3.8)	mNm (oz-in)
8	Back EMF Constant	k_E	0.69	0.54	0.44	0.34	V/1000 rpm
9	Torque Constant	k_M	6.6	5.2	4.2	3.3	mNm/A
10	Motor Regulation	R/k^2	8.6	8.5	8.5	8.5	10^3/Nms
11	Motor Regulation	$k/R^{½}$	10.8 (1.53)	10.8 (1.53)	10.8 (1.53)	10.8 (1.53)	mNm/W^{½} (oz-in/W^{½})
12	Internal Resistance - phase to phase	R_I	0.38	0.23	0.15	0.09	ohms
13	Line to Line Resistance at Connectors	R_L	0.42	0.25	0.18	0.11	ohms
14	Inductance Phase to Phase	L	0.057	0.035	0.022	0.013	mH
15	Mechanical Time Constant	τ_m	1.9	1.9	1.9	1.9	ms
16	Electrical Time Constant	τ_e	0.15	0.15	0.15	0.14	ms

General Data				
17	Maximum Motor Speed	n_{max}	73,000	rpm
18	Ambient Working Temperature Range	-	-30 to + 100 (-22 to + 212)	°C (°F)
19	Ambient Storage Temperature Range	-	-40 to + 100 (-40 to + 212)	°C (°F)
20	Ball Bearings Preload	-	5.5	N
21	Axial Static Force w/o Shaft Support (max)	-	34	N
22	Maximum Winding Temperature	-	125 (257)	°C (°F)
23	Thermal Resistance	R_{th}	2 / 9.7	°C/W
24	Thermal Time Constant	τ_w	1,000	s
25	Weight	-	100 (3.52)	g (oz)
26	Rotor Inertia	J	2.30	g-cm^2
27	Hall Sensor Electrical Phasing*	-	120	Electrical °

*Available without hall sensor

Wire	Description
Gray	Phase 1
Violet	Phase 2
Blue	Phase 3
Green	3.5 to 24V DC
Yellow	GND
Orange	Sensor 1
Red	Sensor 2
Brown	Sensor 3
Black	NTC 10 kohm
White	NTC 10 kohm
with hall effect sensor	

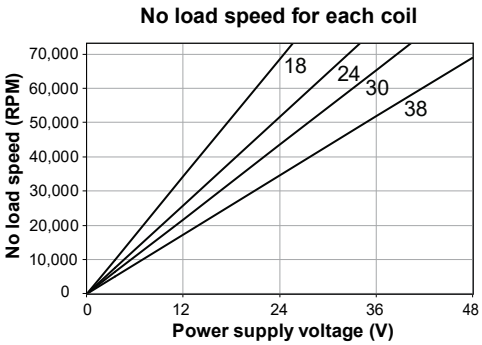

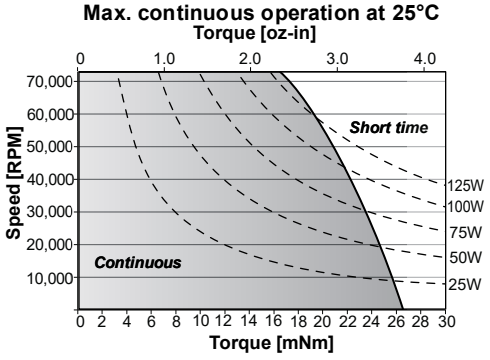

22ECS60 Ultra EC™

Ø 22 mm • 2-pole • 180 W

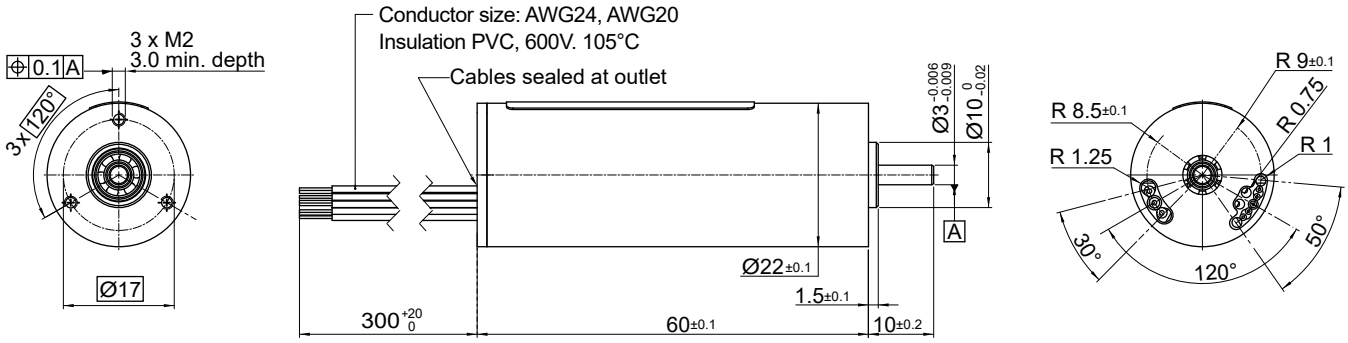

Dimensions in mm.

Electrical Data	Symbol	22ECS60 10B-xxx.01				Unit
		24	21	17	16	
1 Nominal Voltage	U_N	24	24	24	24	Volt
2 Optimization Direction	-	CCW	CCW	CCW	CCW	-
3 No Load Speed	n_0	32,000	35,000	43,000	47,000	rpm
4 Typical No Load Current	I_0	120	150	190	210	mA
5 Max. Continuous Mechanical Power (@25°C)	P_{max}	180	180	180	180	W
6 Max. Continuous Current	$I_{e\,max}$	6.1	7.1	8.7	9.3	A
7 Max. Continuous Torque	$M_{e\,max}$	44.1 (6.25)	45.9 (6.5)	44.5 (6.31)	45 (6.38)	mNm (oz-in)
8 Back EMF Constant	k_E	0.76	0.68	0.53	0.51	V/1000 rpm
9 Torque Constant	k_M	7.3	6.5	5.1	4.8	mNm/A
10 Motor Regulation	R/k^2	3.9	3.6	3.8	3.7	10^3/Nms
11 Motor Regulation	$k/R^{½}$	16 (2.27)	16.7 (2.37)	16.1 (2.28)	16.3 (2.31)	mNm/W^{½} (oz-in/W^{½})
12 Internal Resistance - phase to phase	R_l	0.21	0.15	0.10	0.09	ohms
13 Line to Line Resistance at Connectors	R_L	0.23	0.17	0.13	0.12	ohms
14 Inductance Phase to Phase	L	0.034	0.026	0.017	0.015	mH
15 Mechanical Time Constant	τ_m	1.4	1.3	1.3	1.3	ms
16 Electrical Time Constant	τ_e	0.17	0.17	0.17	0.17	ms

General Data			
17 Maximum Motor Speed	n_{max}	60,000	rpm
18 Ambient Working Temperature Range	-	-30 to + 100 (-22 to + 212)	°C (°F)
19 Ambient Storage Temperature Range	-	-40 to + 100 (-40 to + 212)	°C (°F)
20 Ball Bearings Preload	-	5.5	N
21 Axial Static Force w/o Shaft Support (max)	-	34	N
22 Maximum Winding Temperature	-	125 (257)	°C (°F)
23 Thermal Resistance	R_{th}	1 / 8.4	°C/W
24 Thermal Time Constant	τ_w	1,200	s
25 Weight	-	140 (4.93)	g (oz)
26 Rotor Inertia	J	3.50	g-cm^2
27 Hall Sensor Electrical Phasing*	-	120	Electrical °

*Available without hall sensor

Wire	Description
Gray	Phase 1
Violet	Phase 2
Blue	Phase 3
Green	3.5 to 24V DC
Yellow	GND
Orange	Sensor 1
Red	Sensor 2
Brown	Sensor 3
Black	NTC 10 kohm
White	NTC 10 kohm
with hall effect sensor	

No load speed for each coil

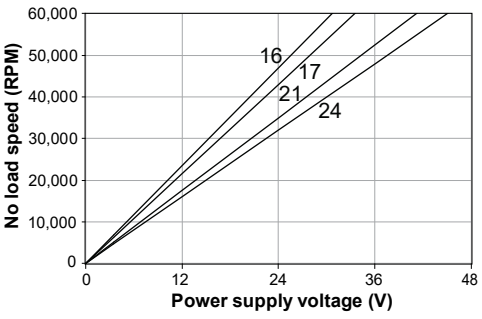

Max. continuous operation at 25°C

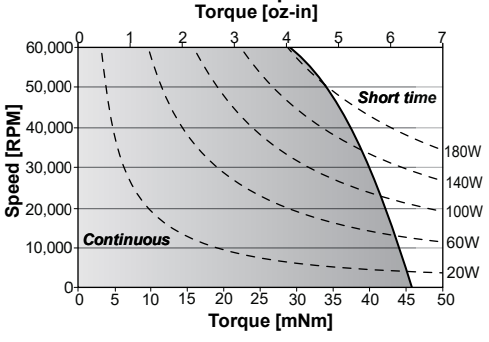

V092020 • © 2020 Portescap. Specifications subject to change without notice.

22ECT35 Ultra EC™

Ø 22 mm • 4-pole • 34 W

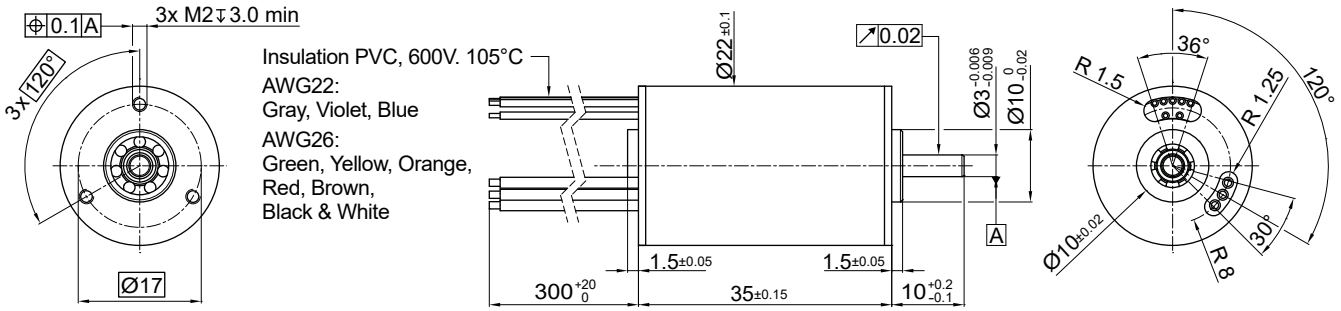

Dimensions in mm.

Electrical Data	Symbol	22ECT35 10B-xxx.01			Unit
		32	52	80	
1 Nominal Voltage	U_N	12	24	24	Volt
2 Optimization Direction	-	Symmetrical	Symmetrical	Symmetrical	-
3 No-Load Speed	n_0	10,330	12,400	8,100	rpm
4 Typical No-Load Current	I_0	100	90	40	mA
5 Max Continuous Mechanical Power (@25°C)	P_{max}	34.0	34.0	34.0	W
6 Max Continuous Current	$I_{e\,max}$	1.8	1.1	0.7	A
7 Max Continuous Torque	$M_{e\,max}$	20 (2.84)	19.9 (2.82)	19.5 (2.77)	mNm (oz-in)
8 Back EMF Constant	k_E	1.14	1.86	2.86	V/1000 rpm
9 Torque Constant	k_M	10.9	17.8	27.3	mNm/A
10 Motor Regulation	R/k^2	11.8	11.8	12.3	10^3/Nms
11 Motor Regulation	$k/R^{½}$	9.2 (1.31)	9.2 (1.31)	9 (1.28)	mNm/W^{½} (oz-in/W^{½})
12 Internal Resistance - phase to phase	R_l	1.40	3.73	9.20	ohms
13 Line to Line Resistance at Connectors	R_L	1.43	3.76	9.23	ohms
14 Inductance Phase to Phase	L	0.12	0.32	0.75	mH
15 Mechanical Time Constant	τ_m	4.2	4.2	4.4	ms
16 Electrical Time Constant	τ_e	0.09	0.08	0.08	ms
General Data					
17 Maximum Motor Speed	n_{max}	20,000			rpm
18 Ambient Working Temperature Range	-	-30 to + 100 (-22 to + 212)			°C (°F)
19 Ambient Storage Temperature Range	-	-40 to + 100 (-40 to + 212)			°C (°F)
20 Ball Bearings Preload	-	6.8			N
21 Axial Static Force w/o Shaft Support (max)	-	45			N
22 Maximum Winding Temperature	-	125 (257)			°C (°F)
23 Thermal Resistance	R_{th}	2.3 / 13			°C/W
24 Thermal Time Constant	τ_w	829			s
25 Weight	-	67 (2.37)			g (oz)
26 Rotor Inertia	J	3.6			g-cm^2
27 Hall Sensor Electrical Phasing*	-	120			Electrical °

*Available without hall sensor

Wire	Description
Gray	Phase 1
Violet	Phase 2
Blue	Phase 3
Green	3.5 to 24V DC
Yellow	GND
Orange	Sensor 1
Red	Sensor 2
Brown	Sensor 3
Black	NTC 10 kohm
White	NTC 10 kohm
with hall effect sensor	

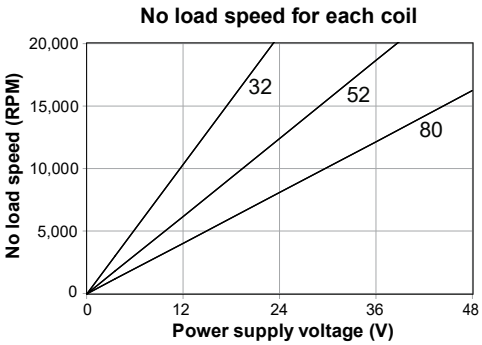

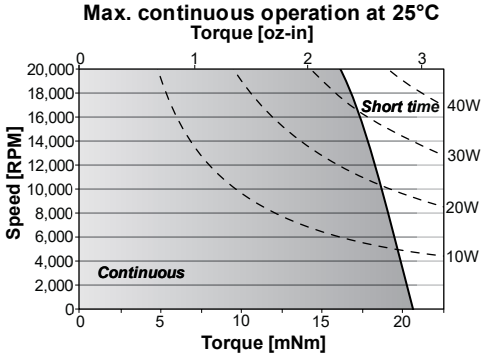

22ECT48 Ultra EC™

Ø 22 mm • 4-pole • 54 W

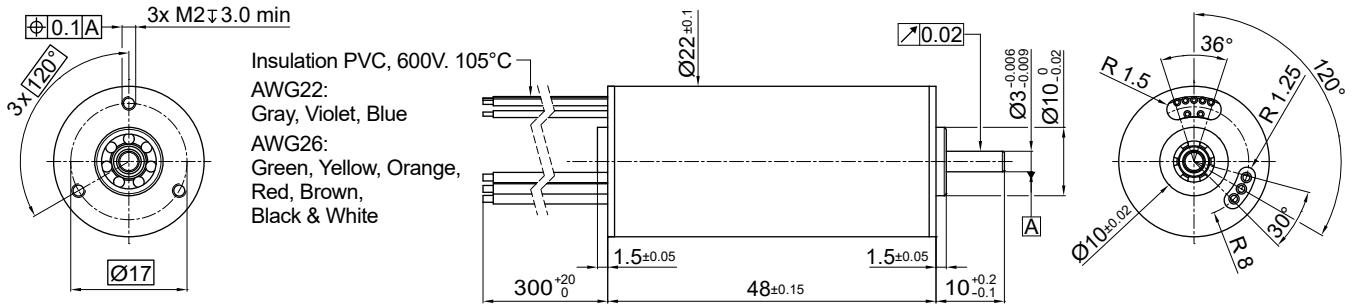

Dimensions in mm.

Electrical Data		Symbol	22ECT48 10B-xxx.01 14	23	35	Unit
1	Nominal Voltage	U_N	12	24	24	Volt
2	Optimization Direction	-	Symmetrical	Symmetrical	Symmetrical	-
3	No Load Speed	n_0	10,140	11,950	7,950	rpm
4	Typical No Load Current	I_0	155	120	70	mA
5	Max. Continuous Mechanical Power (@25°C)	P_{max}	54.0	54.0	54.0	W
6	Max. Continuous Current	$I_{e\,max}$	3.7	2.2	1.5	A
7	Max. Continuous Torque	$M_{e\,max}$	41.6 (5.9)	41.1 (5.82)	40.8 (5.78)	mNm (oz-in)
8	Back EMF Constant	k_E	1.17	1.95	2.94	V/1000 rpm
9	Torque Constant	k_M	11.2	18.6	28.1	mNm/A
10	Motor Regulation	R/k^2	2.9	3.0	3.0	10^3/Nms
11	Motor Regulation	$k/R^{½}$	18.4 (2.61)	18.2 (2.58)	18.1 (2.57)	mNm/W^{½} (oz-in/W^{½})
12	Internal Resistance - phase to phase	R_l	0.37	1.04	2.40	ohms
13	Line to Line Resistance at Connectors	R_L	0.40	1.07	2.43	ohms
14	Inductance Phase to Phase	L	0.04	0.11	0.24	mH
15	Mechanical Time Constant	τ_m	1.8	1.9	1.9	ms
16	Electrical Time Constant	τ_e	0.11	0.10	0.10	ms

General Data						
17	Maximum Motor Speed	n_{max}	20,000			rpm
18	Ambient Working Temperature Range	-	-30 to + 100 (-22 to + 212)			°C (°F)
19	Ambient Storage Temperature Range	-	-40 to + 100 (-40 to + 212)			°C (°F)
20	Ball Bearings Preload	-	6.8			N
21	Axial Static Force w/o Shaft Support (max)	-	45			N
22	Maximum Winding Temperature	-	125 (257)			°C (°F)
23	Thermal Resistance	R_{th}	2.1 / 12			°C/W
24	Thermal Time Constant	τ_w	962			s
25	Weight	-	98 (3.46)			g (oz)
26	Rotor Inertia	J	6.3			g-cm^2
27	Hall Sensor Electrical Phasing*	-	120			Electrical °

*Available without hall sensor

Wire	Description
Gray	Phase 1
Violet	Phase 2
Blue	Phase 3
Green	3.5 to 24V DC
Yellow	GND
Orange	Sensor 1
Red	Sensor 2
Brown	Sensor 3
Black	NTC 10 kohm
White	NTC 10 kohm
with hall effect sensor	

No load speed for each coil

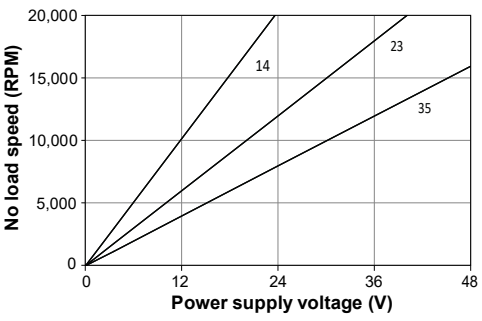

Max. continuous operation at 25°C

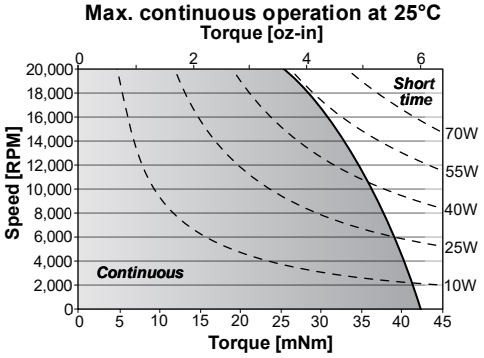

V092020 • © 2020 Portescap. Specifications subject to change without notice.

22ECT60 Ultra EC™

Ø 22 mm • 4-pole • 86 W

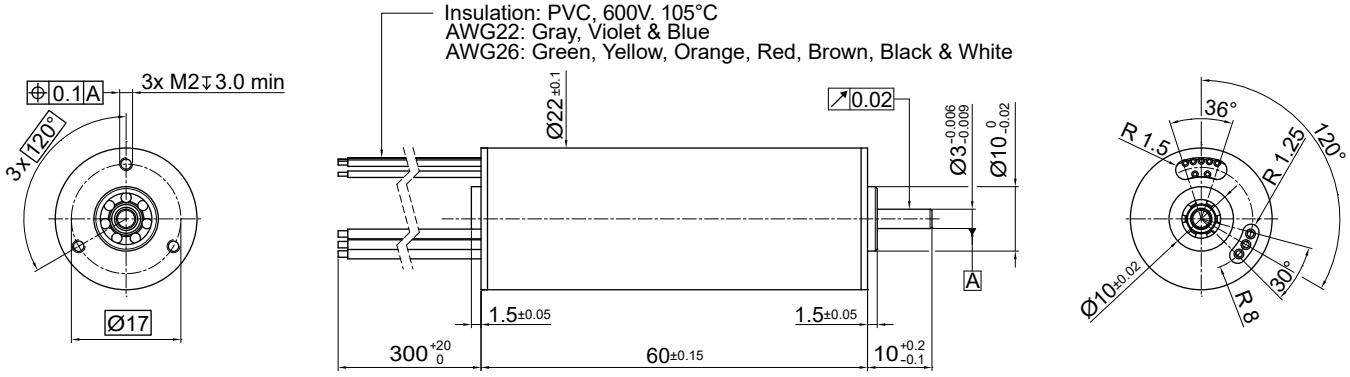

Dimensions in mm.

Electrical Data		Symbol	22ECT60-10B-xxx.01			Unit
			9	15	21	
1	Nominal Voltage	U_N	24	24	24	Volt
2	Optimization Direction	-	Symmetrical	Symmetrical	Symmetrical	-
3	No-Load Speed	n_0	20,370	12,350	9,180	rpm
4	Typical No-Load Current	I_0	370	170	115	mA
5	Max Continuous Mechanical Power (@25°C)	P_{max}	86	86	86	W
6	Max Continuous Current	$I_{e\,max}$	5.9	3.6	2.6	A
7	Max Continuous Torque	$M_{e\,max}$	65.9 (9.34)	66.9 (9.48)	64.3 (9.11)	mNm (oz-in)
8	Back EMF Constant	k_E	1.16	1.97	2.72	V/1000 rpm
9	Torque Constant	k_M	11.1	18.8	26.0	mNm/A
10	Motor Regulation	R/k^2	1.5	1.5	1.6	10^3/Nms
11	Motor Regulation	$k/R^{½}$	25.5 (3.6)	26 (3.7)	25 (3.5)	mNm/W^{½} (oz-in/W^{½})
12	Internal Resistance - phase to phase	R_l	0.19	0.52	1.08	ohms
13	Line to Line Resistance at Connectors	R_L	0.22	0.55	1.11	ohms
14	Inductance Phase to Phase	L	0.02	0.06	0.12	mH
15	Mechanical Time Constant	τ_m	1.3	1.3	1.4	ms
16	Electrical Time Constant	τ_e	0.12	0.12	0.11	ms

General Data				
17	Maximum Motor Speed	n_{max}	20,000	rpm
18	Ambient Working Temperature Range	-	-30 to + 100 (-22 to + 212)	°C (°F)
19	Ambient Storage Temperature Range	-	-40 to + 100 (-40 to + 212)	°C (°F)
20	Ball Bearings Preload	-	6.8	N
21	Axial Static Force w/o Shaft Support (max)	-	45.0	N
22	Maximum Winding Temperature	-	125 (257)	°C (°F)
23	Thermal Resistance	R_{th}	2.0 / 8.8	°C/W
24	Thermal Time Constant	τ_w	980	s
25	Weight	-	123 (4.34)	g (oz)
26	Rotor Inertia	J	8.71	g-cm^2
27	Hall Sensor Electrical Phasing*	-	120	Electrical °

*Available without hall sensor

Wire	Description
Gray	Phase 1
Violet	Phase 2
Blue	Phase 3
Green	3.5 to 24V DC
Yellow	GND
Orange	Sensor 1
Red	Sensor 2
Brown	Sensor 3
Black	NTC 10 kohm
White	NTC 10 kohm
with hall effect sensor	

No load speed for each coil

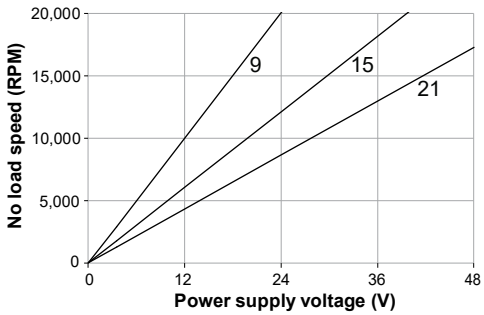

Max. continuous operation at 25°C

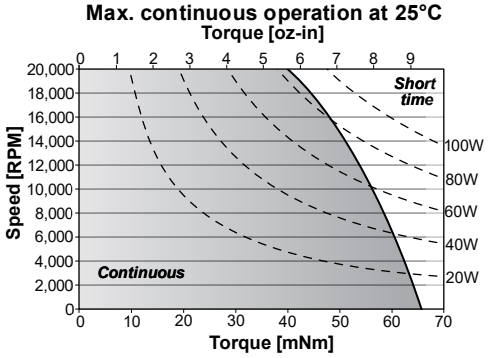

22ECT82 Ultra EC™

Ø 22 mm • 4-pole • 104 W

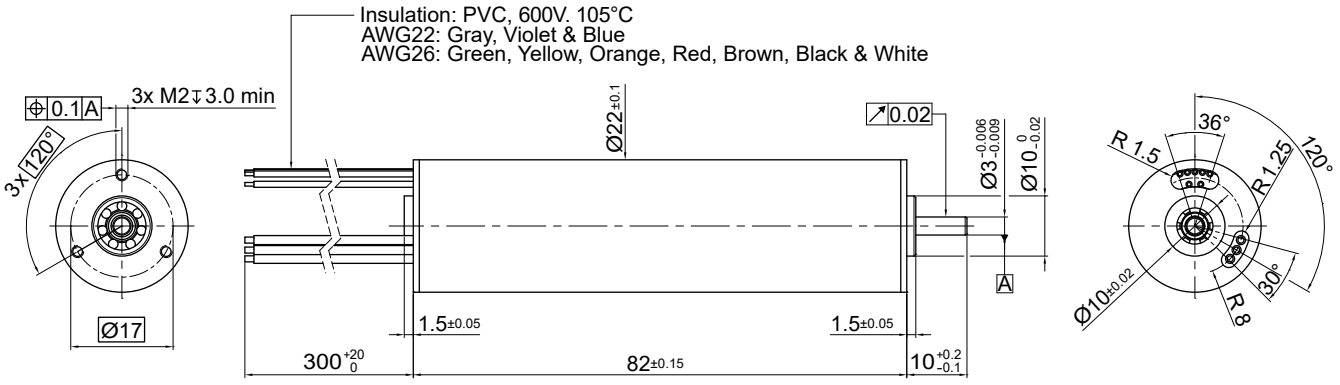

Dimensions in mm.

Electrical Data		Symbol	22ECT82 10B-xxx.01 6	9	15	Unit
1	Nominal Voltage	U_N	24	24	24	Volt
2	Optimization Direction	-	Symmetrical	Symmetrical	Symmetrical	-
3	No Load Speed	n_0	18,550	12,390	7,800	rpm
4	Typical No Load Current	I_0	435	250	130	mA
5	Max. Continuous Mechanical Power (@25°C)	P_{max}	104	104	104	W
6	Max. Continuous Current	$I_{e\,max}$	7.9	5.3	3.2	A
7	Max. Continuous Torque	$M_{e\,max}$	98.4 (13.94)	98.8 (14)	98.3 (13.92)	mNm (oz-in)
8	Back EMF Constant	k_E	1.30	1.96	3.22	V/1000 rpm
9	Torque Constant	k_M	12.4	18.7	30.8	mNm/A
10	Motor Regulation	R/k^2	0.8	0.8	0.8	10^3/Nms
11	Motor Regulation	$k/R^{½}$	35.8 (5.1)	35.9 (5.1)	36 (5.1)	mNm/W^{½} (oz-in/W^{½})
12	Internal Resistance - phase to phase	R_l	0.13	0.27	0.73	ohms
13	Line to Line Resistance at Connectors	R_L	0.16	0.30	0.76	ohms
14	Inductance Phase to Phase	L	0.02	0.03	0.09	mH
15	Mechanical Time Constant	τ_m	1.1	1.0	1.0	ms
16	Electrical Time Constant	τ_e	0.12	0.13	0.13	ms

General Data				
17	Maximum Motor Speed	n_{max}	20,000	rpm
18	Ambient Working Temperature Range	-	-30 to + 100 (-22 to + 212)	°C (°F)
19	Ambient Storage Temperature Range	-	-40 to + 100 (-40 to + 212)	°C (°F)
20	Ball Bearings Preload	-	6.8	N
21	Axial Static Force w/o Shaft Support (max)	-	45.0	N
22	Maximum Winding Temperature	-	125 (257)	°C (°F)
23	Thermal Resistance	R_{th}	1.4 / 8.2	°C/W
24	Thermal Time Constant	τ_w	1,140	s
25	Weight	-	174 (6.14)	g (oz)
26	Rotor Inertia	J	13.17	g-cm^2
27	Hall Sensor Electrical Phasing*	-	120	Electrical °

*Available without hall sensor

Wire	Description
Gray	Phase 1
Violet	Phase 2
Blue	Phase 3
Green	3.5 to 24V DC
Yellow	GND
Orange	Sensor 1
Red	Sensor 2
Brown	Sensor 3
Black	NTC 10 kohm
White	NTC 10 kohm
with hall effect sensor	

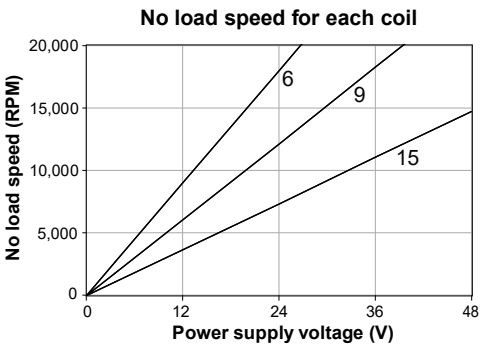

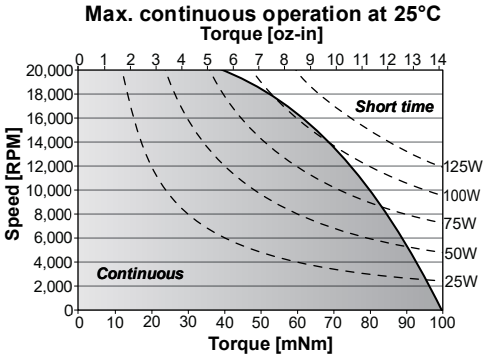

V092020 • © 2020 Portescap. Specifications subject to change without notice.

26BC 3C

Ø 26 mm • 2-pole • 8 W

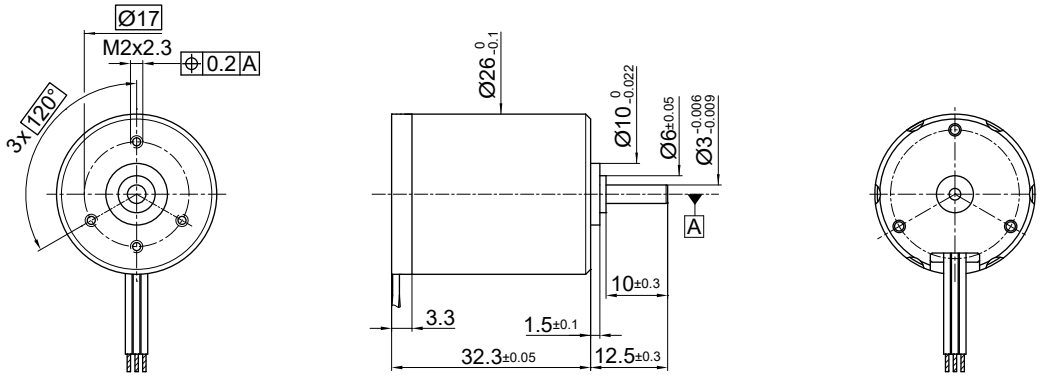

Dimensions in mm.

Electrical Data	Symbol	26BC 3C-109P.101	Unit
1 Nominal Voltage	U_N	12	Volt
2 Optimization Direction	-	n.a.	-
3 No-Load Speed	n_0	14,800	rpm
4 Typical No-Load Current	I_0	180.0	mA
5 Max Continuous Mechanical Power (@25°C)	P_{max}	8.0	W
6 Max Continuous Current	$I_{e\,max}$	0.8	A
7 Max Continuous Torque	$M_{e\,max}$	7 (1)	mNm (oz-in)
8 Back EMF Constant	k_E	0.73	V/1000 rpm
9 Torque Constant	k_M	7.0	mNm/A
10 Motor Regulation	R/k^2	102.0	10^3/Nms
11 Motor Regulation	$k/R^{½}$	3.1 (0.44)	mNm/W^{½} (oz-in/W^{½})
12 Internal Resistance - phase to phase	R_l	5.00	ohms
13 Line to Line Resistance at Connectors	R_L	5.00	ohms
14 Inductance Phase to Phase	L	0.09	mH
15 Mechanical Time Constant	τ_m	95.0	ms
16 Electrical Time Constant	τ_e	0.02	ms
General Data			
17 Maximum Motor Speed	n_{max}	20,000	rpm
18 Ambient Working Temperature Range	-	0 to + 70 (+32 to +158)	°C (°F)
19 Ambient Storage Temperature Range	-	0 to + 70 (+32 to +158)	°C (°F)
20 Ball Bearings Preload	-	5.0	N
21 Axial Static Force w/o Shaft Support (max)	-	45.0	N
22 Maximum Winding Temperature	-	125 (257)	°C (°F)
23 Thermal Resistance	R_{th}	14.0	°C/W
24 Thermal Time Constant	τ_w	660	s
25 Weight	-	72 (2.54)	g (oz)
26 Rotor Inertia	J	9.400	g-cm^2
27 Hall Sensor Electrical Phasing	-	NA	Electrical °

Wire	Description
Gray	Phase 1
Violet	Phase 2
Blue	Phase 3
sensorless	

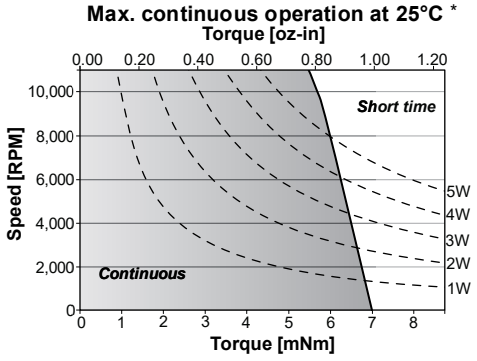

*Depends on coil and electronic 3C / 6A

26BC 6A

Ø 26 mm • 2-pole • 4.5 W

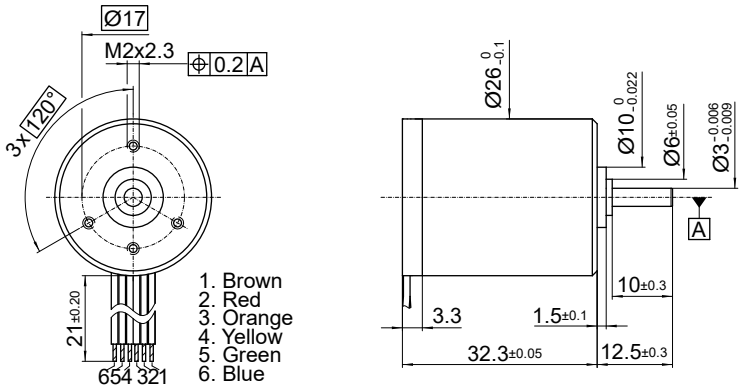

Dimensions in mm.

Electrical Data		Symbol	26BC 6A-xxx.101				Unit
			119	113	110	107	
1	Nominal Voltage	U_N	7.5	7.5	15	15	Volt
2	Optimization Direction	-	Symmetrical	Symmetrical	Symmetrical	Symmetrical	-
3	No Load Speed	n_0	12,500	7,250	9,300	4,700	rpm
4	Typical No Load Current	I_0	250.0	170.0	120.0	50.0	mA
5	Max. Continuous Mechanical Power (@25°C)	P_{max}	4.5	4.5	4.5	4.5	W
6	Max. Continuous Current	$I_{e\,max}$	1.2	0.6	0.4	0.2	A
7	Max. Continuous Torque	$M_{e\,max}$	4 (0.57)	4.2 (0.6)	4.4 (0.63)	4 (0.57)	mNm (oz-in)
8	Back EMF Constant	k_E	0.56	0.96	1.40	2.66	V/1000 rpm
9	Torque Constant	k_M	5.4	9.2	13.4	25.4	mNm/A
10	Motor Regulation	R/k^2	65.2	80.3	98.0	107.0	10^3/Nms
11	Motor Regulation	$k/R^{½}$	3.92 (0.56)	3.53 (0.5)	3.19 (0.46)	3.06 (0.44)	mNm/$W^{½}$ (oz-in/$W^{½}$)
12	Internal Resistance - phase to phase	R_I	1.90	6.80	17.60	69.00	ohms
13	Line to Line Resistance at Connectors	R_L	1.90	6.80	17.60	69.00	ohms
14	Inductance Phase to Phase	L	0.03	0.12	0.32	1.23	mH
15	Mechanical Time Constant	τ_m	61.0	75.0	92.0	100.0	ms
16	Electrical Time Constant	τ_e	0.02	0.02	0.02	0.02	ms

General Data				
17	Maximum Motor Speed	n_{max}	14,000	rpm
18	Ambient Working Temperature Range	-	0 to + 70 (+32 to +158))	°C (°F)
19	Ambient Storage Temperature Range	-	0 to + 70 (+32 to +158)	°C (°F)
20	Ball Bearings Preload	-	5.0	N
21	Axial Static Force w/o Shaft Support (max)	-	45.0	N
22	Maximum Winding Temperature	-	125 (257)	°C (°F)
23	Thermal Resistance	R_{th}	14.0	°C/W
24	Thermal Time Constant	τ_w	660	s
25	Weight	-	72 (2.54)	g (oz)
26	Rotor Inertia	J	9.400	g-cm^2
27	Hall Sensor Electrical Phasing	-	NA	Electrical °

Wire	Description
Brown	Ground
Red	Power supply voltage(2.5 - 18 V)**
Orange	Direction CCW/CW
Yellow	Enable start / stop***
Green	Logic supply voltage(5 - 18 V)
Blue	Speed signal****
integrated electronics	

** For coil 119 and 113, do not exceed 7.5 V max.

*** When grounded, motor is not powered

**** Speed signal is a square wave voltage with one pulse per revolution

Do not reverse polarity!

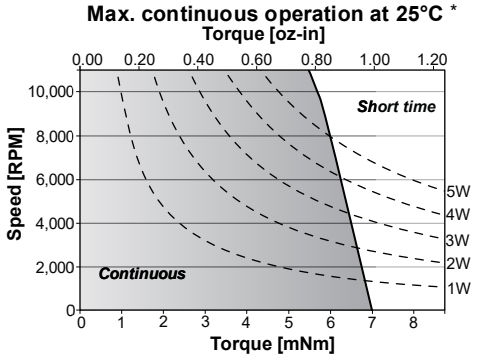

*Depends on coil and electronic 3C / 6A

V092020 • © 2020 Portescap. Specifications subject to change without notice.

30ECT64 Ultra EC™

Ø 30 mm • 4-pole • 187 W

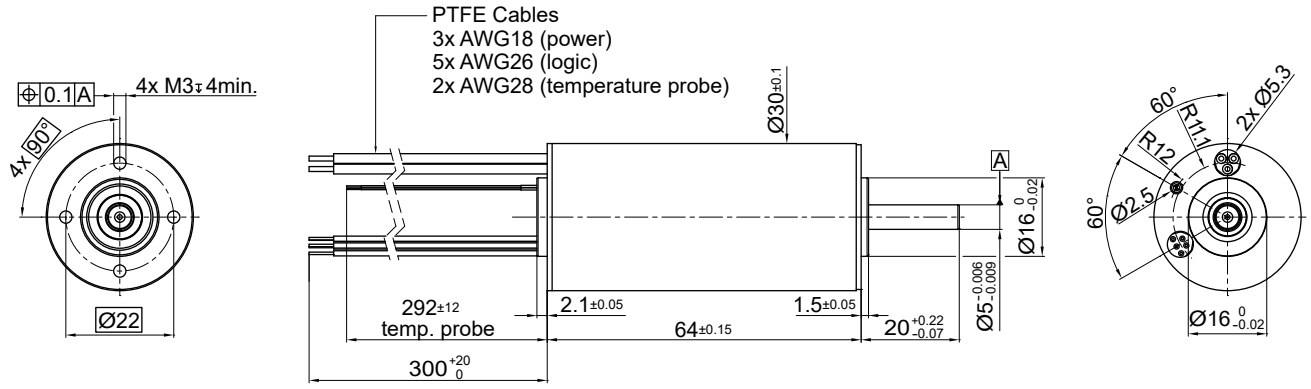

Dimensions in mm.

Electrical Data		Symbol	30ECT64-10B-xxx.01 4	7	11	14	Unit
1	Nominal Voltage	U_N	18	24	36	48	Volt
2	Optimization Direction	-	Symmetrical	Symmetrical	Symmetrical	Symmetrical	-
3	No-Load Speed	n_0	28,550	21,930	21,150	22,425	rpm
4	Typical No-Load Current	I_0	1,100	575	425	300	mA
5	Max Continuous Mechanical Power (@25°C)	P_{max}	187.0	187.0	187.0	187.0	W
6	Max Continuous Current	$I_{e\,max}$	22.8	12.9	8.1	6.5	A
7	Max Continuous Torque	$M_{e\,max}$	137 (19.40)	136 (19.26)	134 (18.98)	133 (18.84)	mNm (oz-in)
8	Back EMF Constant	k_E	0.63	1.10	1.74	2.14	V/1000 rpm
9	Torque Constant	k_M	6.0	10.5	16.6	20.5	mNm/A
10	Motor Regulation	R/k^2	0.55	0.57	0.59	0.60	10^3/Nms
11	Motor Regulation	$k/R^{½}$	42.5 (6.02)	41.8 (5.92)	41.3 (5.85)	40.8 (5.78)	mNm/W^{½} (oz-in/W^{½})
12	Internal Resistance - phase to phase	R_l	0.02	0.06	0.16	0.25	ohms
13	Line to Line Resistance at Connectors	R_L	0.04	0.08	0.18	0.27	ohms
14	Inductance Phase to Phase	L	0.01	0.02	0.04	0.06	mH
15	Mechanical Time Constant	τ_m	1.6	1.6	1.6	1.7	ms
16	Electrical Time Constant	τ_e	0.25	0.23	0.22	0.23	ms

General Data				
17	Maximum Motor Speed	n_{max}	30,000	rpm
18	Ambient Working Temperature Range	-	-30 to + 100 (-22 to + 212)	°C (°F)
19	Ambient Storage Temperature Range	-	-40 to + 100 (-40 to + 212)	°C (°F)
20	Ball Bearings Preload	-	13.5	N
21	Axial Static Force w/o Shaft Support (max)	-	134	N
22	Maximum Winding Temperature	-	150 (302)	°C (°F)
23	Thermal Resistance	R_{th}	0.9/7	°C/W
24	Thermal Time Constant	τ_w	1,327	s
25	Weight	-	263 (9.28)	g (oz)
26	Rotor Inertia	J	28.00	g-cm^2
27	Hall Sensor Electrical Phasing*	-	120	Electrical °

*Available without hall sensor

Wire	Description
Gray	Phase 1
Violet	Phase 2
Blue	Phase 3
Green	4 to 24V DC
Yellow	GND
Orange	Sensor 1
Red	Sensor 2
Brown	Sensor 3
White	NTC 10 kohm
White	NTC 10 kohm
with hall effect sensor	

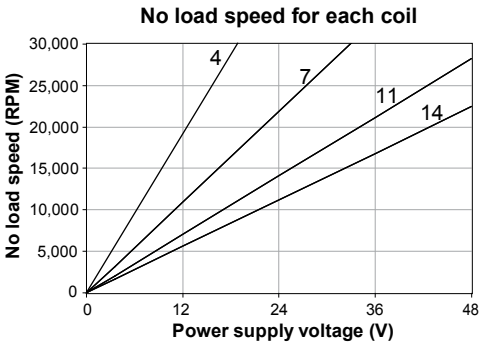

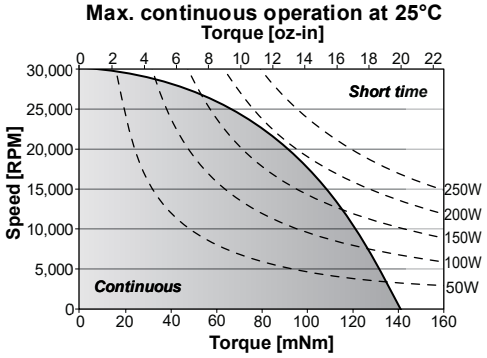

30ECT90 Ultra EC™

Ø 30 mm • 4-pole • 244 W

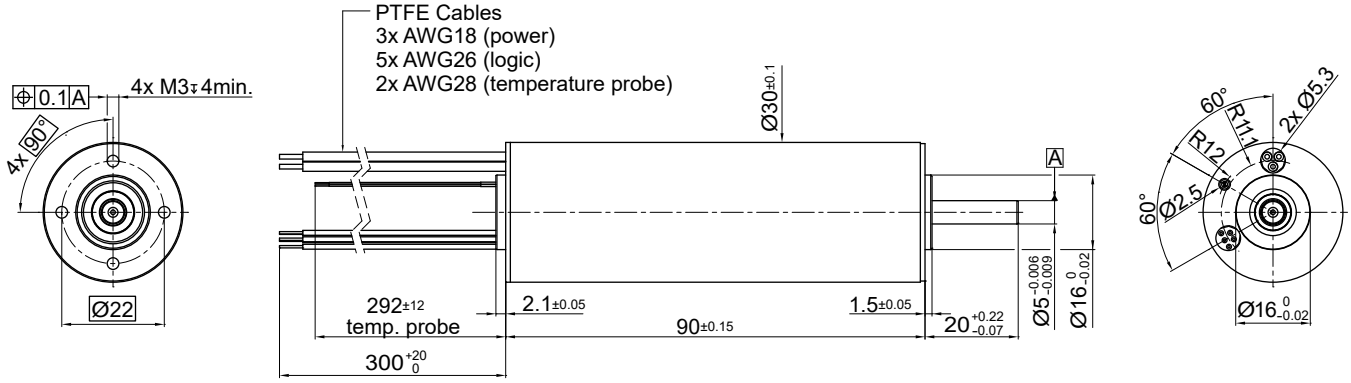

Dimensions in mm.

Electrical Data	Symbol	30ECT90 10B-xxx.01 4	6	8	Unit
1 Nominal Voltage	U_N	24	36	48	Volt
2 Optimization Direction	-	Symmetrical	Symmetrical	Symmetrical	-
3 No Load Speed	n_0	21,370	21,690	22,100	rpm
4 Typical No Load Current	I_0	1050	640	575	mA
5 Max. Continuous Mechanical Power (@25°C)	P_{max}	244.0	244.0	244.0	W
6 Max. Continuous Current	$I_{e\,max}$	21.0	14.0	10.4	A
7 Max. Continuous Torque	$M_{e\,max}$	225 (31.86)	221 (31.3)	219 (31.02)	mNm (oz-in)
8 Back EMF Constant	k_E	1.12	1.66	2.21	V/1000 rpm
9 Torque Constant	k_M	10.7	15.8	21.1	mNm/A
10 Motor Regulation	R/k^2	0.2	0.3	0.3	10^3/Nms
11 Motor Regulation	$k/R^{½}$	63.5 (9)	62.3 (8.83)	61.4 (8.69)	mNm/W^{½} (oz-in/W^{½})
12 Internal Resistance - phase to phase	R_l	0.03	0.06	0.12	ohms
13 Line to Line Resistance at Connectors	R_L	0.04	0.08	0.13	ohms
14 Inductance Phase to Phase	L	0.01	0.02	0.03	mH
15 Mechanical Time Constant	τ_m	1.1	1.2	1.2	ms
16 Electrical Time Constant	τ_e	0.27	0.26	0.25	ms
General Data					
17 Maximum Motor Speed	n_{max}	25,000			rpm
18 Ambient Working Temperature Range	-	-30 to + 100 (-22 to + 212)			°C (°F)
19 Ambient Storage Temperature Range	-	-40 to + 100 (-40 to + 212)			°C (°F)
20 Ball Bearings Preload	-	13.5			N
21 Axial Static Force w/o Shaft Support (max)	-	134			N
22 Maximum Winding Temperature	-	150 (302)			°C (°F)
23 Thermal Resistance	R_{th}	0.7/5.9			°C/W
24 Thermal Time Constant	τ_w	1,659			s
25 Weight	-	380 (13.41)			g (oz)
26 Rotor Inertia	J	45.00			g-cm^2
27 Hall Sensor Electrical Phasing	-	120			Electrical °

*Available without hall sensor

Wire	Description
Gray	Phase 1
Violet	Phase 2
Blue	Phase 3
Green	4 to 24V DC
Yellow	GND
Orange	Sensor 1
Red	Sensor 2
Brown	Sensor 3
Black	Thermistor (+)
White	Thermistor (-)
with hall effect sensor	

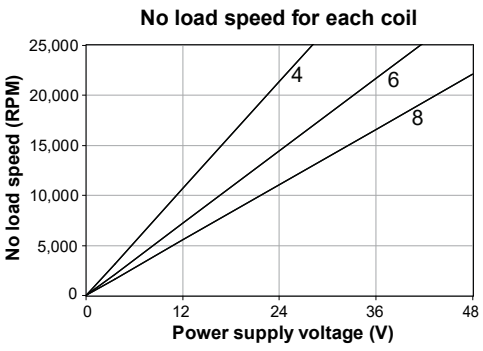

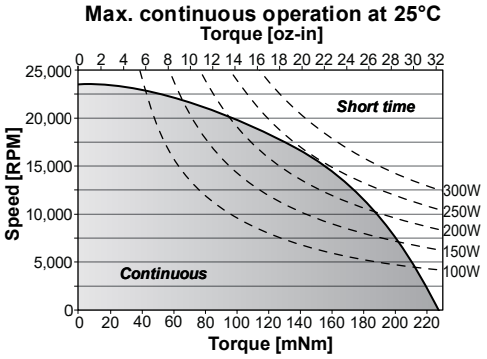

V092020 • © 2020 Portescap. Specifications subject to change without notice.

32BF nuvoDisc™

Ø 32 mm • 8-pole • 40 W

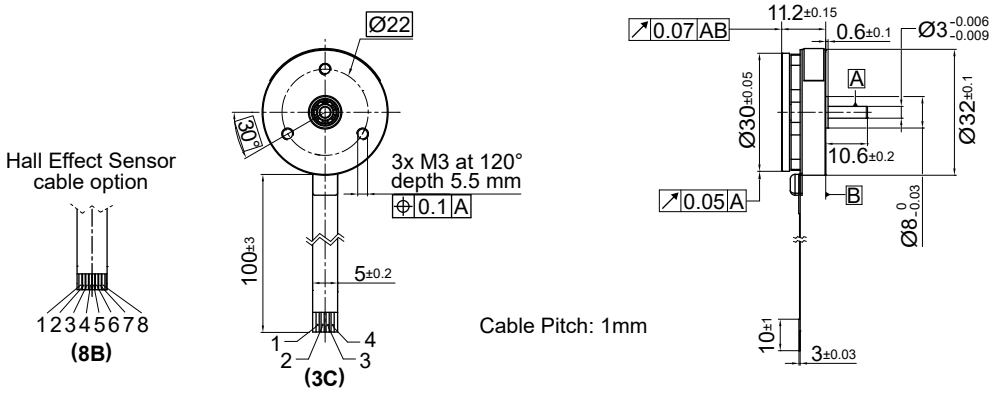

Dimensions in mm.

Electrical Data	Symbol	32BF 3C-K.11 32BF 8B-10	Unit
1 Nominal Voltage	U_N	12	Volt
2 Optimization Direction	-	Symmetrical	-
3 No-Load Speed	n_0	13,600	rpm
4 Typical No-Load Current	I_0	100.0	mA
5 Max Continuous Mechanical Power (@25°C)	P_{max}	40.0	W
6 Max Continuous Current	$I_{e\,max}$	1.5	A
7 Max Continuous Torque	$M_{e\,max}$	13 (1.85)	mNm (oz-in)
8 Back EMF Constant	k_E	0.87	V/1000 rpm
9 Torque Constant	k_M	8.3	mNm/A
10 Motor Regulation	R/k^2	57.5	10^3/Nms
11 Motor Regulation	$k/R^{½}$	4.2 (0.6)	mNm/W^{½} (oz-in/W^{½})
12 Internal Resistance - phase to phase	R_l	3.95	ohms
13 Line to Line Resistance at Connectors	R_L	3.95	ohms
14 Inductance Phase to Phase	L	0.12	mH
15 Mechanical Time Constant	τ_m	64.9	ms
16 Electrical Time Constant	τ_e	0.03	ms
General Data			
17 Maximum Motor Speed	n_{max}	30,000	rpm
18 Ambient Working Temperature Range	-	-30 to +80 (-22 to +176)	°C (°F)
19 Ambient Storage Temperature Range	-	-40 to +80 (-40 to +176)	°C (°F)
20 Ball Bearings Preload	-	7	N
21 Axial Static Force w/o Shaft Support (max)	-	27.0	N
22 Maximum Winding Temperature	-	125 (257)	°C (°F)
23 Thermal Resistance	R_{th}	13.0	°C/W
24 Thermal Time Constant	τ_w	550	s
25 Weight	-	27 (0.96)	g (oz)
26 Rotor Inertia	J	11.300	g-cm^2
27 Hall Sensor Electrical Phasing*	-	120	Electrical °

*Available without hall sensor

Wire	Description
1	Phase 1
2	Phase 2
3	Phase 3
4	3.5 to 24V DC
5	GND
6	Sensor 1
7	Sensor 2
8	Sensor 3
with hall effect sensor (8B)	

Wire	Description
1	center point of Y winding
2	Phase 1
3	Phase 2
4	Phase 3
sensorless (3C)	

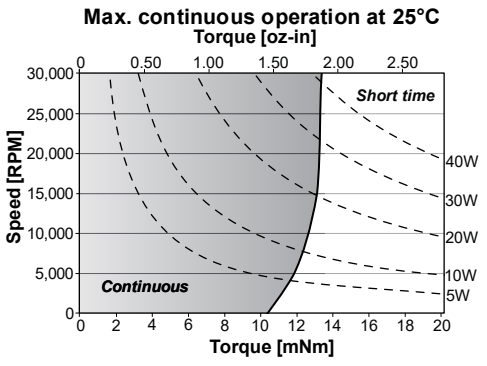

35ECS60 Ultra EC™

Ø 35 mm • 2-pole • 262 W

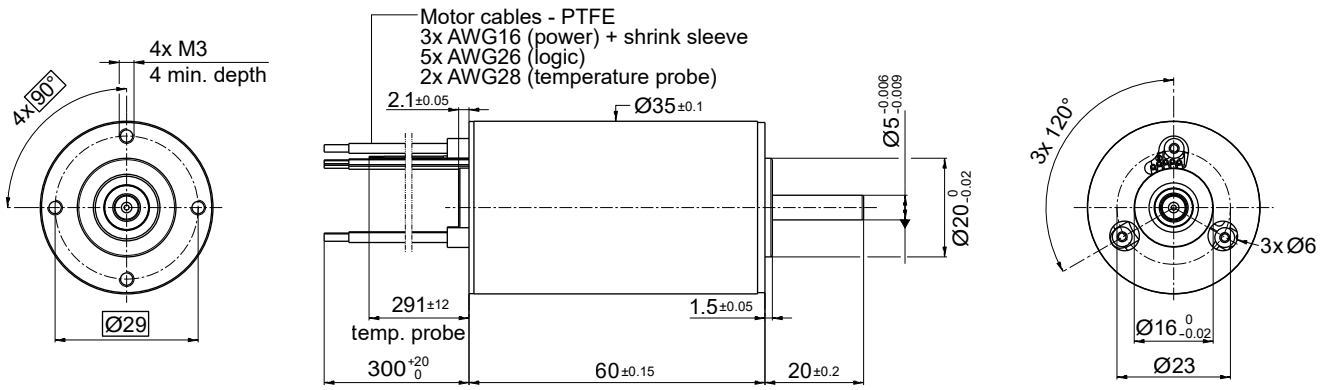

Dimensions in mm.

Electrical Data		Symbol	35ECS60 10B-xxx.01				Unit
			8	10	15	20	
1	Nominal Voltage	U_N	20	24	36	48	Volt
2	Optimization Direction	-	Symmetrical	Symmetrical	Symmetrical	Symmetrical	-
3	No Load Speed	n_0	38,900	38,500	39,000	39,300	rpm
4	Typical No Load Current	I_0	1000	900	500	360	mA
5	Max. Continuous Mechanical Power (@25°C)	P_{max}	262	262	262	262	W
6	Max. Continuous Current	$I_{e\,max}$	25.3	20.1	13.2	9.8	A
7	Max. Continuous Torque	$M_{e\,max}$	120.6 (17.1)	120.6 (17.1)	117.9 (16.7)	115.8 (16.4)	mNm (oz-in)
8	Back EMF Constant	k_E	0.51	0.63	0.94	1.24	V/1000 rpm
9	Torque Constant	k_M	4.90	6.01	8.94	11.83	mNm/A
10	Motor Regulation	R/k^2	0.832	0.886	0.928	0.961	10^3/Nms
11	Motor Regulation	$k/R^{½}$	34.6 (4.9)	33.6 (4.76)	32.8 (4.65)	32.3 (4.57)	mNm/W^{½} (oz-in/W^{½})
12	Internal Resistance - phase to phase	R_l	0.02	0.032	0.074	0.135	ohms
13	Line to Line Resistance at Connectors	R_L	0.026	0.044	0.086	0.147	ohms
14	Inductance Phase to Phase	L	0.011	0.017	0.037	0.064	mH
15	Mechanical Time Constant	τ_m	1.6	1.8	1.9	2.0	ms
16	Electrical Time Constant	τ_e	0.6	0.5	0.5	0.5	ms

General Data				
17	Maximum Motor Speed	n_{max}	40,000	rpm
18	Ambient Working Temperature Range	-	-30 to + 100 (-22 to + 212)	°C (°F)
19	Ambient Storage Temperature Range	-	-40 to + 100 (-40 to + 212)	°C (°F)
20	Ball Bearings Preload	-	9	N
21	Axial Static Force w/o Shaft Support (max)	-	134	N
22	Maximum Winding Temperature	-	150 (302)	°C (°F)
23	Thermal Resistance	R_{th}	0.8/5.7	°C/W
24	Thermal Time Constant	τ_w	1,618	s
25	Weight	-	315 (11.11)	g (oz)
26	Rotor Inertia	J	20.4	g-cm^2
27	Hall Sensor Electrical Phasing	-	120	Electrical °

*Available without hall sensor

Wire	Description
Gray	Phase 1
Violet	Phase 2
Blue	Phase 3
Green	4 to 24V DC
Yellow	GND
Orange	Sensor 1
Red	Sensor 2
Brown	Sensor 3
White	NTC 10 kohm
White	NTC 10 kohm
with hall effect sensor	

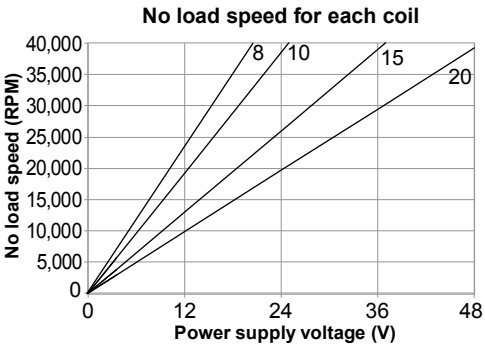

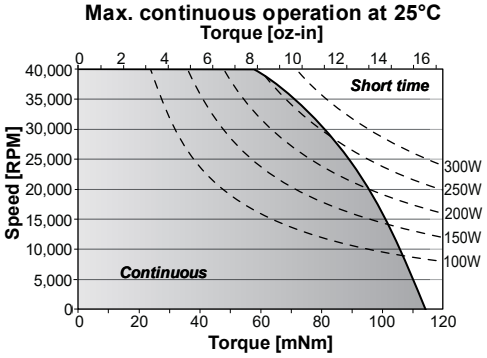

V092020 • © 2020 Portescap. Specifications subject to change without notice.

35ECS80 Ultra EC™

Ø 35 mm • 2-pole • 330 W

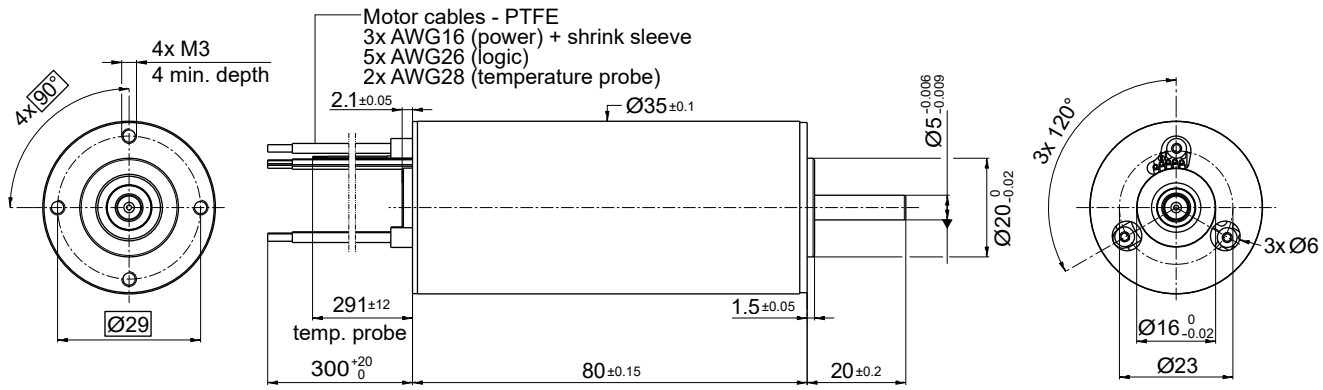

Dimensions in mm.

Electrical Data		Symbol	35ECS80 10B-xxx.01			Unit
			8	11	14	
1	Nominal Voltage	U_N	24	36	48	Volt
2	Optimization Direction	-	Symmetrical	Symmetrical	Symmetrical	-
3	No Load Speed	n_0	27,000	29,500	31,100	rpm
4	Typical No Load Current	I_0	700	550	430	mA
5	Max. Continuous Mechanical Power (@25°C)	P_{max}	330	330	330	W
6	Max. Continuous Current	$I_{e\,max}$	22.6	16.4	12.9	A
7	Max. Continuous Torque	$M_{e\,max}$	193.4 (27.3)	193.1 (27.3)	193.1 (27.3)	mNm (oz-in)
8	Back EMF Constant	k_E	0.9	1.23	1.57	V/1000 rpm
9	Torque Constant	k_M	8.56	11.78	14.98	mNm/A
10	Motor Regulation	R/k^2	0.367	0.368	0.369	10^3/Nms
11	Motor Regulation	$k/R^{½}$	52.2 (7.37)	52.1 (7.37)	52.1 (7.37)	mNm/W^{½} (oz-in/W^{½})
12	Internal Resistance - phase to phase	R_l	0.027	0.051	0.083	ohms
13	Line to Line Resistance at Connectors	R_L	0.039	0.063	0.095	ohms
14	Inductance Phase to Phase	L	0.017	0.03	0.047	mH
15	Mechanical Time Constant	τ_m	1.2	1.2	1.2	ms
16	Electrical Time Constant	τ_e	0.4	0.6	0.5	ms

General Data				
17	Maximum Motor Speed	n_{max}	40000	rpm
18	Ambient Working Temperature Range	-	-30 to + 100 (-22 to + 212)	°C (°F)
19	Ambient Storage Temperature Range	-	-40 to + 100 (-40 to + 212)	°C (°F)
20	Ball Bearings Preload	-	9	N
21	Axial Static Force w/o Shaft Support (max)	-	134	N
22	Maximum Winding Temperature	-	150 (302)	°C (°F)
23	Thermal Resistance	R_{th}	0.7/5.4	°C/W
24	Thermal Time Constant	τ_w	1,822	s
25	Weight	-	440 (15.52)	g (oz)
26	Rotor Inertia	J	33	g-cm^2
27	Hall Sensor Electrical Phasing	-	120	Electrical °

*Available without hall sensor

Wire	Description
Gray	Phase 1
Violet	Phase 2
Blue	Phase 3
Green	4 to 24V DC
Yellow	GND
Orange	Sensor 1
Red	Sensor 2
Brown	Sensor 3
White	NTC 10 kohm
White	NTC 10 kohm
with hall effect sensor	

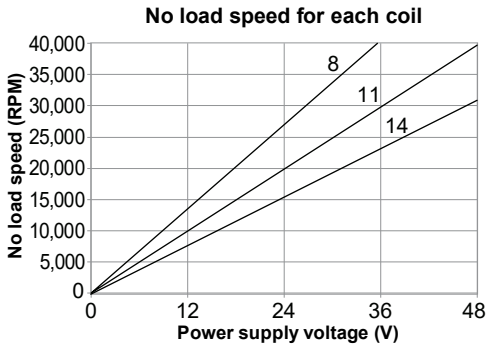

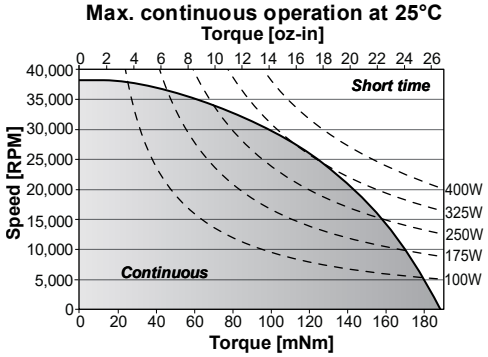

Motors For Surgical Applications

Epitomizing the exceptional quality of the Portescap brand, our application specific surgical motors are designed to meet the specialized performance requirements of high-precision powered surgical hand tools.
With 20 years of experience designing and manufacturing motors for surgical applications, we understand how speed, torque and efficiency affect the performance of powered surgical hand tools. Portescap's autoclavable Brushless Direct Current (BLDC) motors are designed to provide high power in a lightweight ergonomic package. Our motors excel at meeting the requirements for exceptional surgical results, and have the durability to withstand sterilization and exposure to saline or other materials encountered in the surgical environment.

Spine Drills

ENT Microdebriders

Arthroscopic Shavers

Large Bone Drills

Application Specific Motors For Powered Surgical Hand Tools

Portescap designs and manufactures motors for various medical applications, including arthroscopic shavers, large bone orthopedic drills, ENT microdebriders, ENT drills, high-speed spine and neuro drills, and more.

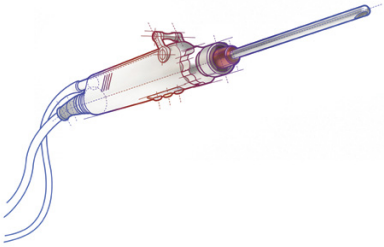

Arthroscopic joint shavers
Arthroscopic procedures require high torque, speed and efficiency. Portescap BLDC motors are an ideal solution for powered surgical hand tools used in minimally invasive surgical procedures to repair joints such as the hip, knee, and shoulder.

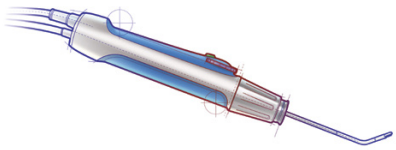

ENT microdebriders
Optimized for ENT microdebrider (ENT shaver) applications, the torque and speed requirements make Portescap motors an ideal solution for powered surgical hand tools used in minimally invasive surgical procedures of the ear, nose and throat.
Also see our ENT drill motor for high speed drilling applications.

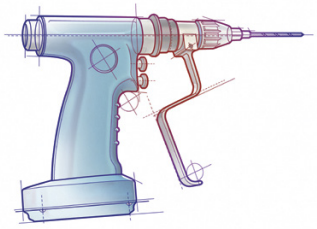

Large bone orthopedic drills
Orthopedic surgery procedures require high torque, speed and efficiency. Portescap BLDC motors enable the design of lightweight and powerful orthopedic drills, screwdrivers and reamers used in joint replacement procedures.

Working with You to Save, Improve and Enhance Lives

Motor performance tailored to your application requirements

High and low volume manufacturing

Samples available upon request

Vertically integrated design and manufacturing

Contact us for more information about our application specific surgical motors or to review requirements of your surgical application.

North America **Sales.america@portescap.com**
South America **Vendas@portescap.com**
Europe, Middle East, Africa **Sales.europe@portescap.com**
Asia, India **Sales.asia@portescap.com**

Motors For Surgical Applications

Meet your Application's Working Point Requirements

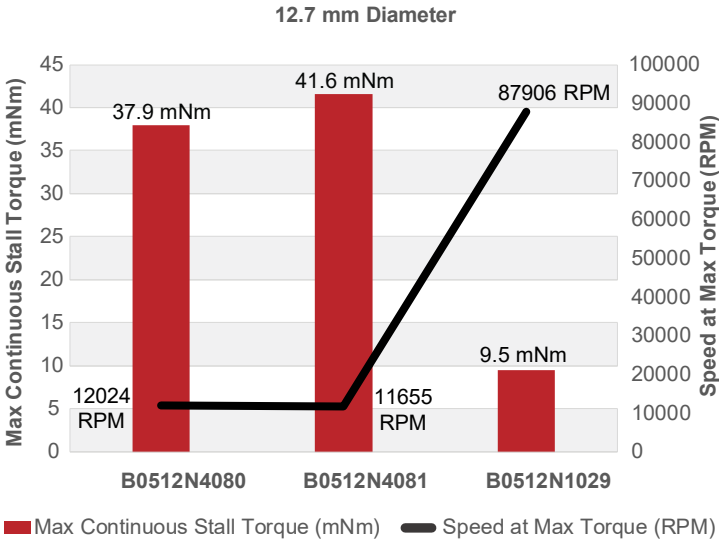

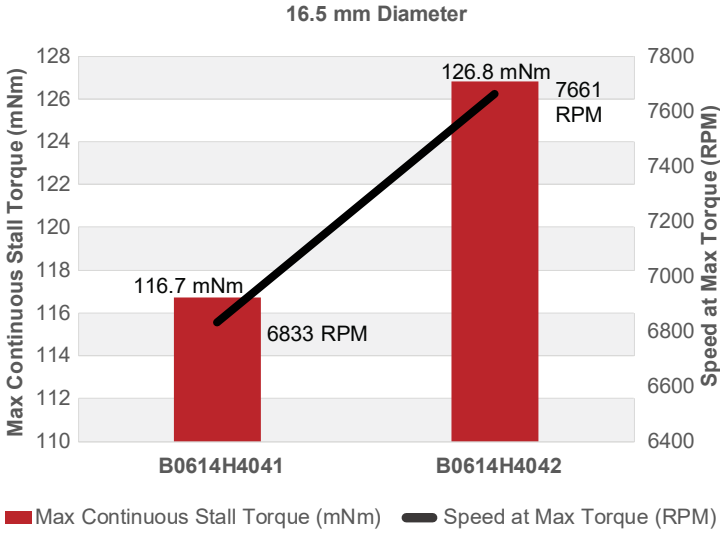

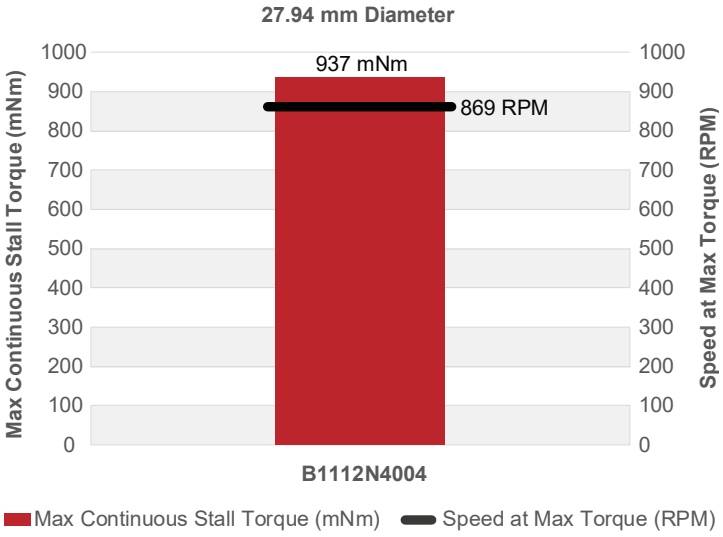

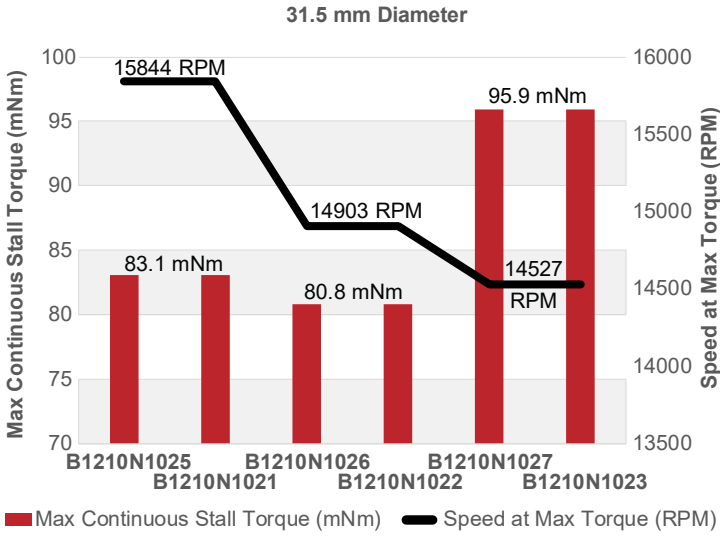

V092020 • © 2020 Portescap. Specifications subject to change without notice.

B0512N1029 Spine Drill

Ø 0.5 inch • Brushless Slotted • 48 V

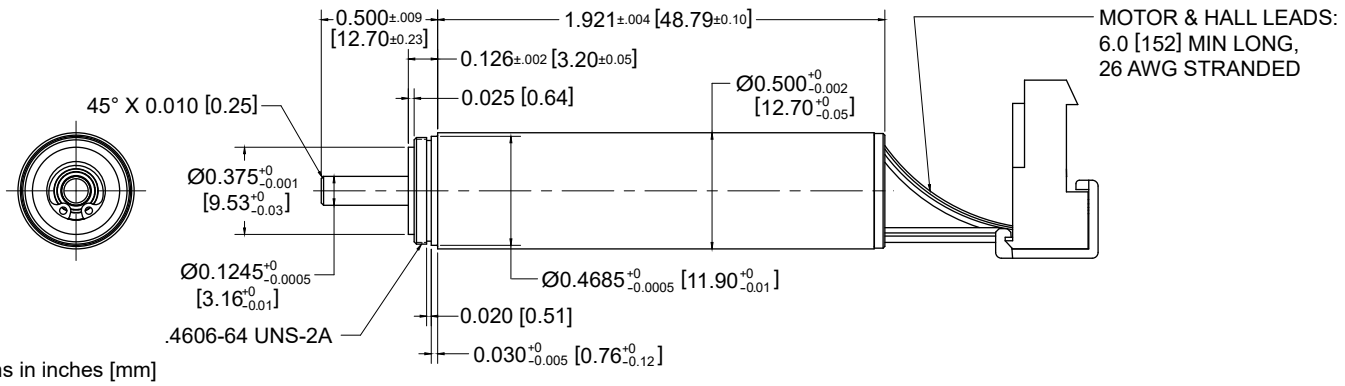

Dimensions in inches [mm]

Electrical Data	Symbol	SMX B0512N1029	Unit
1 Nominal Voltage	U_N	48.0	Volt
2 Optimization Direction	-	Bi-Directional	-
3 No Load Speed	n_O	97,400	rpm
4 Typical No Load Current	I_O	120	mA
5 Max. Continuous Mechanical Power (@25°C)	P_{max}	87.4	W
6 Max. Continuous Current	I_{CS}	2.02	A
7 Max. Continuous Torque	T_{CS}	9.5 (1.34)	mNm (oz-in)
8 Back EMF Constant	k_E	0.515	V/1000 rpm
9 Torque Constant	k_T	4.92 (0.70)	mNm/A (oz-in/A)
10 Motor Regulation	R/k^2	54944	10^3/Nms
11 Peak Torque	T_{pk}	176.1 (24.9)	mNm (oz-in)
12 Motor Constant	k_M	4.27 (0.607)	mNm/W½ (oz-in/W½)
13 Line to Line Resistance	R_L	1.33	ohms
14 Inductance Phase to Phase	L	0.094	mH
15 Mechanical Time Constant	τ_m	2.62	ms
16 Electrical Time Constant	τ_e	0.07	ms
General Data			
17 Gearhead Ratio	-	N/A	Ratio
18 Ambient Working Temperature Range	-	25 (77)	°C (°F)
19 Max Operating Temperature Range	-	155 (311)	°C (°F)
20 Radial Static Force w/o Shaft Support (max)	-	15.34	lbs
21 Axial Static Force w/o Shaft Support (max)	-	3.33	lbs
22 Thermal Resistance	R_{th}	15.9	°C/W
23 Thermal Time Constant	τ_W	485	s
24 Weight	-	38.5 (1.36)	g (oz)
25 Rotor Inertia	Jm	3.15 (4.46)	kg-cm² 10^{-4} (oz-in-sec² 10^{-6})
26 Hall Sensor Electrical Phasing	-	60	Electrical °
27 Autoclave Cycles	-	1000+	Cycles

Notes:
- Three phase motor with Wye connections
- Hall sensors: supply voltage 4.5 V - 24 V
- Typical housing material 303 SS
- Motor type has been designed and tested to achieve the stated number of autoclave cycles
- Above parameters specified for 25° C ambient temperature
- Typical shaft material 17-4 PH

Wire	Description
Blue	Phase A
Brown	Phase B
Violet	Phase C
Red	4.5 to 24 Vdc
Yellow	Hall 1
Orange	Hall 2
White	Hall 3
Black	Supply RTN

B0512N1029 Output - Efficiency Performance

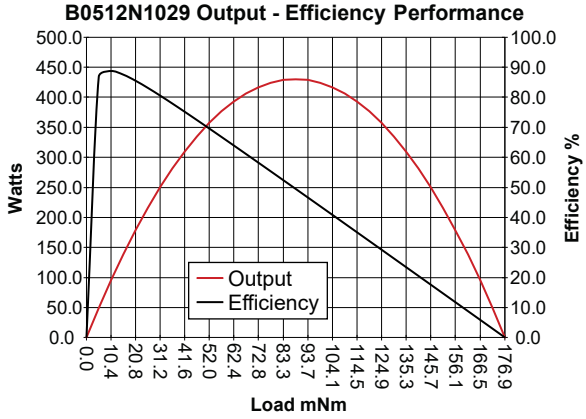

B0512N1029 Speed - Current Performance

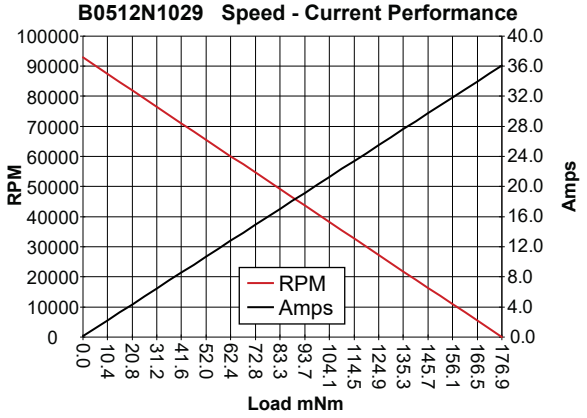

B0512N4080 ENT Microdebrider

Ø 0.5 inch • Brushless Slotted • 24 V

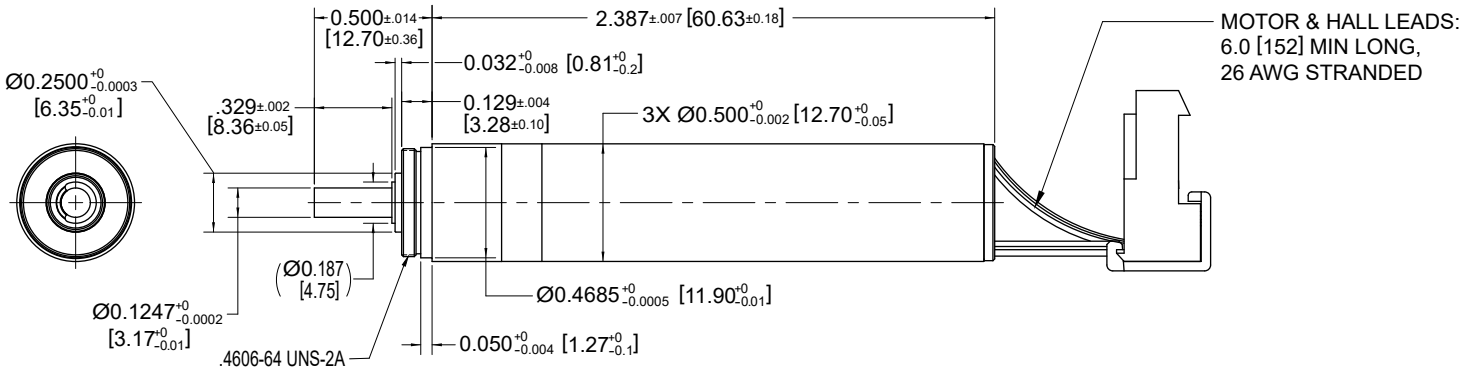

Dimensions in inches [mm]

Electrical Data		Symbol	SMX B0512N4080	Unit
1	Nominal Voltage	U_N	24.0	Volt
2	Optimization Direction	-	Bi-Directional	-
3	No Load Speed	n_O	13,385	rpm
4	Typical No Load Current	I_O	340	mA
5	Max. Continuous Mechanical Power (@25°C)	P_{max}	47.8	W
6	Max. Continuous Current	I_{CS}	2.56	A
7	Max. Continuous Torque	T_{CS}	37.9 (5.4)	mNm (oz-in)
8	Back EMF Constant	k_E	1.805	V/1000 rpm
9	Torque Constant	k_T	15.51 (2.2)	mNm/A (oz-in/A)
10	Motor Regulation	R/k^2	3429	10^3/Nms
11	Peak Torque	T_{pk}	445.3 (63.1)	mNm (oz-in)
12	Motor Constant	k_M	17.06 (2.42)	mNm/W½ (oz-in/W½)
13	Line to Line Resistance	R_L	0.825	ohms
14	Inductance Phase to Phase	L	0.058	mH
15	Mechanical Time Constant	τ_m	3.30	ms
16	Electrical Time Constant	τ_e	0.070	ms
General Data				
17	Gearhead Ratio	-	5:1	Ratio
18	Ambient Working Temperature Range	-	25 (77)	°C (°F)
19	Max Operating Temperature Range	-	155 (311)	°C (°F)
20	Radial Static Force w/o Shaft Support (max)	-	4.52	lbs
21	Axial Static Force w/o Shaft Support (max)	-	6.33	lbs
22	Thermal Resistance	R_{th}	15.9	°C/W
23	Thermal Time Constant	τ_W	485	s
24	Weight	-	53.8 (1.89)	g (oz)
25	Rotor Inertia	Jm	3.15 (4.46)	kg-cm² 10^{-4} (oz-in-sec² 10^{-6})
26	Hall Sensor Electrical Phasing	-	60	Electrical °
27	Autoclave Cycles	-	1000+	Cycles

Notes:
- Three phase motor with Wye connections
- Hall sensors: supply voltage 4.5 V - 24 V
- Typical housing material 303 SS
- Motor type has been designed and tested to achieve the stated number of autoclave cycles
- Above parameters specified for 25° C ambient temperature
- Typical shaft material 17-4 PH

Wire	Description
Blue	Phase A
Brown	Phase B
Violet	Phase C
Red	4.5 to 24 Vdc
Yellow	Hall 1
Orange	Hall 2
White	Hall 3
Black	Supply RTN

B0512N4080 Output - Efficiency Performance

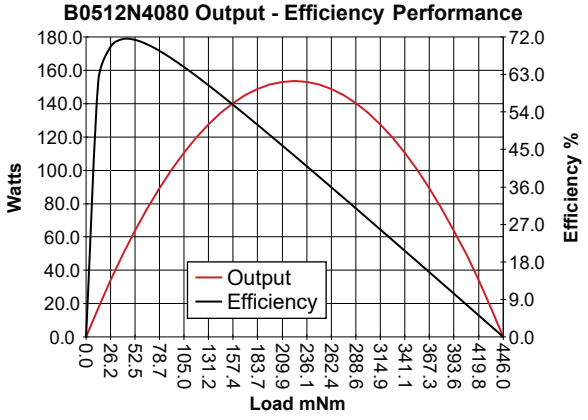

B0512N4080 Speed - Current Performance

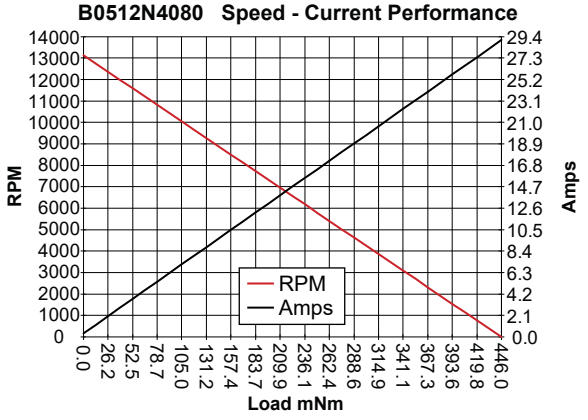

V092020 • © 2020 Portescap. Specifications subject to change without notice.

B0512N4081 ENT Microdebrider

Ø 0.5 inch • Brushless Slotted • 48 V

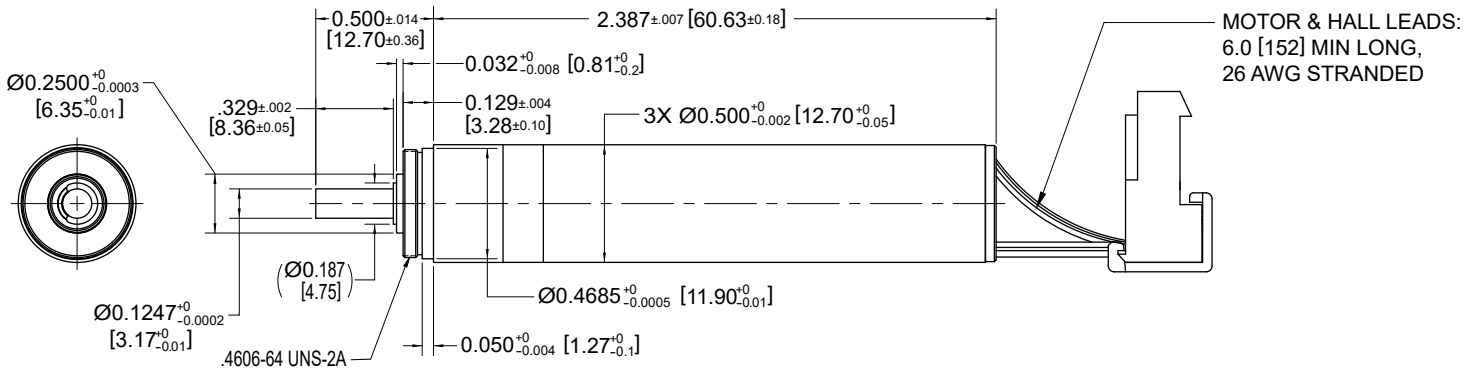

Dimensions in inches [mm]

Electrical Data		Symbol	SMX B0512N4081	Unit
1	Nominal Voltage	U_N	48.0	Volt
2	Optimization Direction	-	Bi-Directional	-
3	No Load Speed	n_O	12,800	rpm
4	Typical No Load Current	I_O	165	mA
5	Max. Continuous Mechanical Power (@25°C)	P_{max}	50.8	W
6	Max. Continuous Current	I_{CS}	1.35	A
7	Max. Continuous Torque	T_{CS}	41.6 (5.9)	mNm (oz-in)
8	Back EMF Constant	k_E	3.75	V/1000 rpm
9	Torque Constant	k_T	32.23 (4.56)	mNm/A (oz-in/A)
10	Motor Regulation	R/k^2	2840	10^3/Nms
11	Peak Torque	T_{pk}	518.9 (73.5)	mNm (oz-in)
12	Motor Constant	k_M	18.75 (2.68)	mNm/W½ (oz-in/W½)
13	Line to Line Resistance	R_L	2.95	ohms
14	Inductance Phase to Phase	L	0.24	mH
15	Mechanical Time Constant	τ_m	2.74	ms
16	Electrical Time Constant	τ_e	0.081	ms
General Data				
17	Gearhead Ratio	-	5:1	Ratio
18	Ambient Working Temperature Range	-	25 (77)	°C (°F)
19	Max Operating Temperature Range	-	155 (311)	°C (°F)
20	Radial Static Force w/o Shaft Support (max)	-	4.52	lbs
21	Axial Static Force w/o Shaft Support (max)	-	6.33	lbs
22	Thermal Resistance	R_{th}	15.9	°C/W
23	Thermal Time Constant	τ_W	485	s
24	Weight	-	48 (1.7)	g (oz)
25	Rotor Inertia	Jm	3.15 (4.46)	kg-cm² 10^{-4} (oz-in-sec² 10^{-6})
26	Hall Sensor Electrical Phasing	-	60	Electrical °
27	Autoclave Cycles	-	1000+	Cycles

Notes:
- Three phase motor with Wye connections
- Hall sensors: supply voltage 4.5 V - 24 V
- Typical housing material 303 SS
- Motor type has been designed and tested to achieve the stated number of autoclave cycles
- Above parameters specified for 25° C ambient temperature
- Typical shaft material 17-4 PH

Wire	Description
Blue	Phase A
Brown	Phase B
Violet	Phase C
Red	4.5 to 24 Vdc
Yellow	Hall 1
Orange	Hall 2
White	Hall 3
Black	Supply RTN

B0512N4081 Output - Efficiency Performance

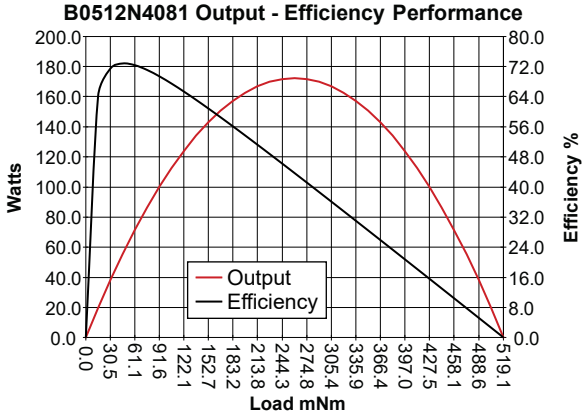

B0512N4081 Speed - Current Performance

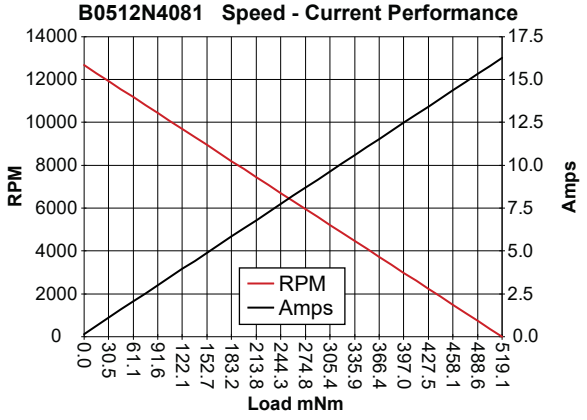

B0612H1005 Cannulated Shaver/Microdebrider

Ø 0.65 inch • Brushless Slotted • 48 V

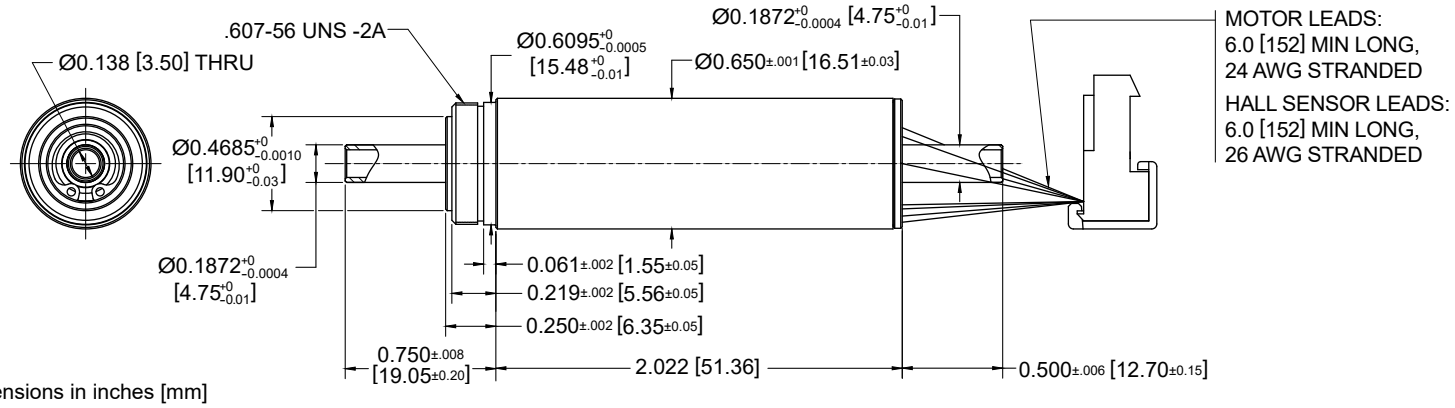

Dimensions in inches [mm]

Electrical Data	Symbol	SMX B0612H1005	Unit
1 Nominal Voltage	U_N	48.0	Volt
2 Optimization Direction	-	Bi-Directional	-
3 No Load Speed	n_O	35,300	rpm
4 Typical No Load Current	I_O	125	mA
5 Max. Continuous Mechanical Power (@25°C)	P_{max}	68.5	W
6 Max. Continuous Current	I_{CS}	1.80	A
7 Max. Continuous Torque	T_{CS}	19.6 (2.78)	mNm (oz-in)
8 Back EMF Constant	k_E	1.33	V/1000 rpm
9 Torque Constant	k_T	12.71 (1.8)	mNm/A (oz-in/A)
10 Motor Regulation	R/k^2	13321	10^3/Nms
11 Peak Torque	T_{pk}	141.7 (20.1)	mNm (oz-in)
12 Motor Constant	k_M	8.69 (1.23)	mNm/W½ (oz-in/W½)
13 Line to Line Resistance	R_L	2.152	ohms
14 Inductance Phase to Phase	L	0.525	mH
15 Mechanical Time Constant	τ_m	0.80	ms
16 Electrical Time Constant	τ_e	0.244	ms
General Data			
17 Gearhead Ratio	-	N/A	Ratio
18 Ambient Working Temperature Range	-	25 (77)	°C (°F)
19 Max Operating Temperature Range	-	155 (311)	°C (°F)
20 Radial Static Force w/o Shaft Support (max)	-	25.99	lbs
21 Axial Static Force w/o Shaft Support (max)	-	10.33	lbs
22 Thermal Resistance	R_{th}	12.0	°C/W
23 Thermal Time Constant	τ_W	936	s
24 Weight	-	75.8 (2.67)	g (oz)
25 Rotor Inertia	Jm	9.79 (13.86)	kg-cm² 10^{-4} (oz-in-sec² 10^{-6})
26 Hall Sensor Electrical Phasing	-	60	Electrical °
27 Autoclave Cycles	-	1000+	Cycles

Notes:
- Three phase motor with Wye connections
- Hall sensors: supply voltage 4.5 V - 24 V
- Typical housing material 303 SS
- Motor type has been designed and tested to achieve the stated number of autoclave cycles
- Above parameters specified for 25° C ambient temperature
- Typical shaft material 17-4 PH

Wire	Description
Blue	Phase A
Brown	Phase B
Violet	Phase C
Red	4.5 to 24 Vdc
Yellow	Hall 1
Orange	Hall 2
White	Hall 3
Black	Supply RTN

B0612H1005 Output - Efficiency Performance

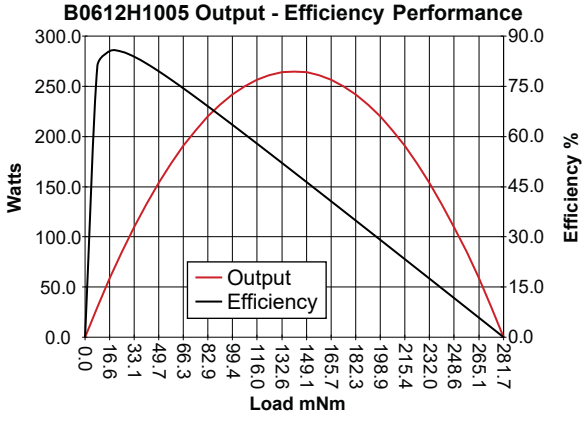

B0612H1005 Speed - Current Performance

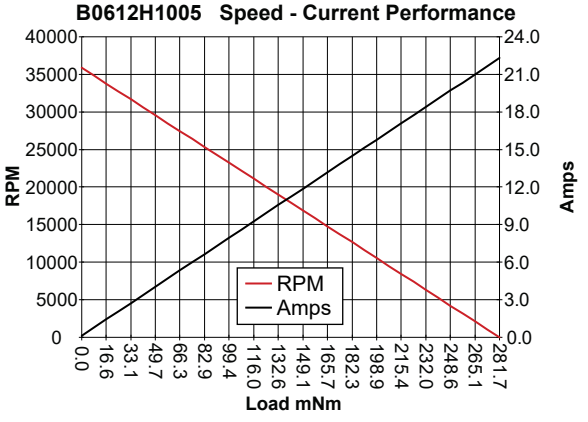

V092020 • © 2020 Portescap. Specifications subject to change without notice.

B0612H1007 Cannulated Shaver/Microdebrider

Ø 0.65 inch • Brushless Slotted • 24 V

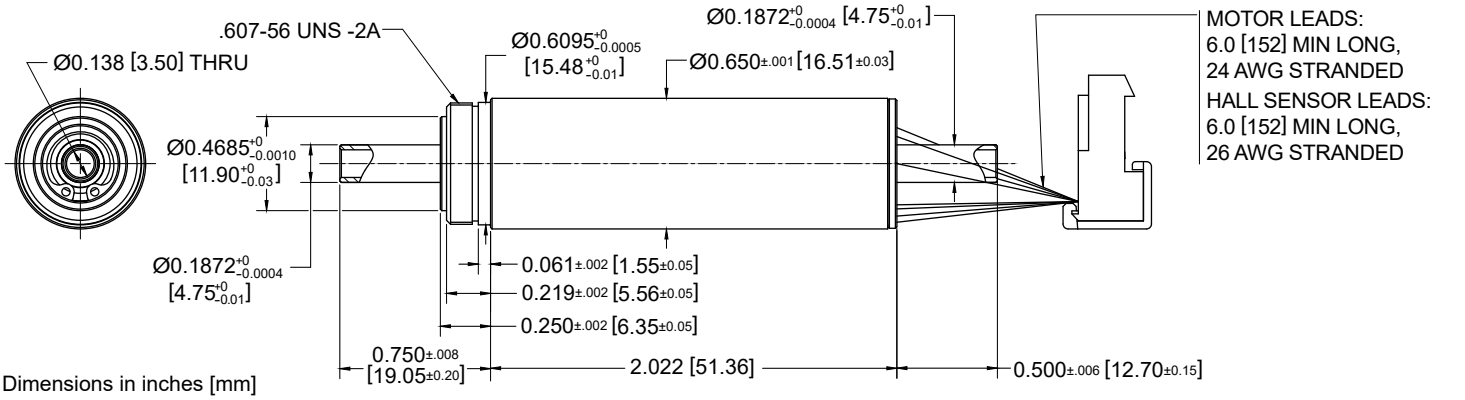

Dimensions in inches [mm]

Electrical Data		Symbol	SMX B0612H1007	Unit
1	Nominal Voltage	U_N	24.0	Volt
2	Optimization Direction	-	Bi-Directional	-
3	No Load Speed	n_O	35,597	rpm
4	Typical No Load Current	I_O	284	mA
5	Max. Continuous Mechanical Power (@25°C)	P_{max}	68.5	W
6	Max. Continuous Current	I_{CS}	3.62	A
7	Max. Continuous Torque	T_{CS}	19.8 (2.81)	mNm (oz-in)
8	Back EMF Constant	k_E	0.671	V/1000 rpm
9	Torque Constant	k_T	6.40 (0.907)	mNm/A (oz-in/A)
10	Motor Regulation	R/k^2	13379	10^3/Nms
11	Peak Torque	T_{pk}	278.2 (39.4)	mNm (oz-in)
12	Motor Constant	k_M	8.69 (1.23)	mNm/W½ (oz-in/W½)
13	Line to Line Resistance	R_L	0.548	ohms
14	Inductance Phase to Phase	L	0.119	mH
15	Mechanical Time Constant	τ_m	0.80	ms
16	Electrical Time Constant	τ_e	0.217	ms
General Data				
17	Gearhead Ratio	-	N/A	Ratio
18	Ambient Working Temperature Range	-	25 (77)	°C (°F)
19	Max Operating Temperature Range	-	155 (311)	°C (°F)
20	Radial Static Force w/o Shaft Support (max)	-	25.99	lbs
21	Axial Static Force w/o Shaft Support (max)	-	10.33	lbs
22	Thermal Resistance	R_{th}	12.0	°C/W
23	Thermal Time Constant	τ_W	936	s
24	Weight	-	75.8 (2.67)	g (oz)
25	Rotor Inertia	Jm	9.79 (13.86)	kg-cm² 10^{-4} (oz-in-sec² 10^{-6})
26	Hall Sensor Electrical Phasing	-	60	Electrical °
27	Autoclave Cycles	-	1000+	Cycles

Notes:
- Three phase motor with Wye connections
- Hall sensors: supply voltage 4.5 V - 24 V
- Typical housing material 303 SS
- Motor type has been designed and tested to achieve the stated number of autoclave cycles
- Above parameters specified for 25° C ambient temperature
- Typical shaft material 17-4 PH

Wire	Description
Blue	Phase A
Brown	Phase B
Violet	Phase C
Red	4.5 to 24 Vdc
Yellow	Hall 1
Orange	Hall 2
White	Hall 3
Black	Supply RTN

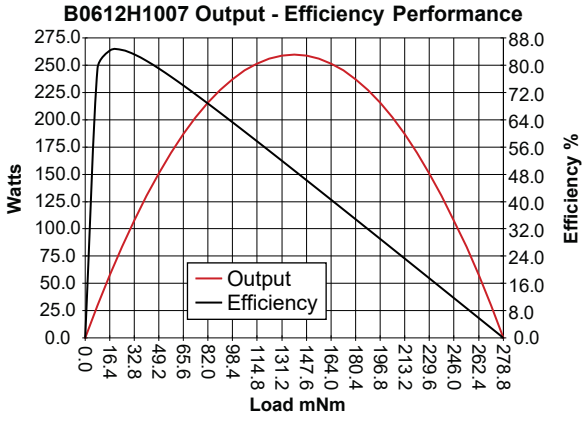

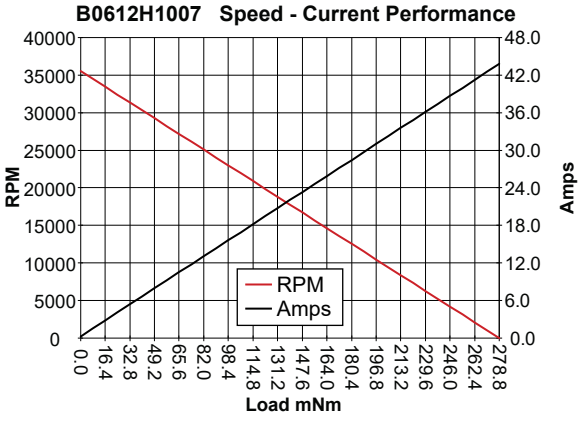

B0614H4041 Arthroscopic Shaver

Ø 0.65 inch • Brushless Slotted • 24 V

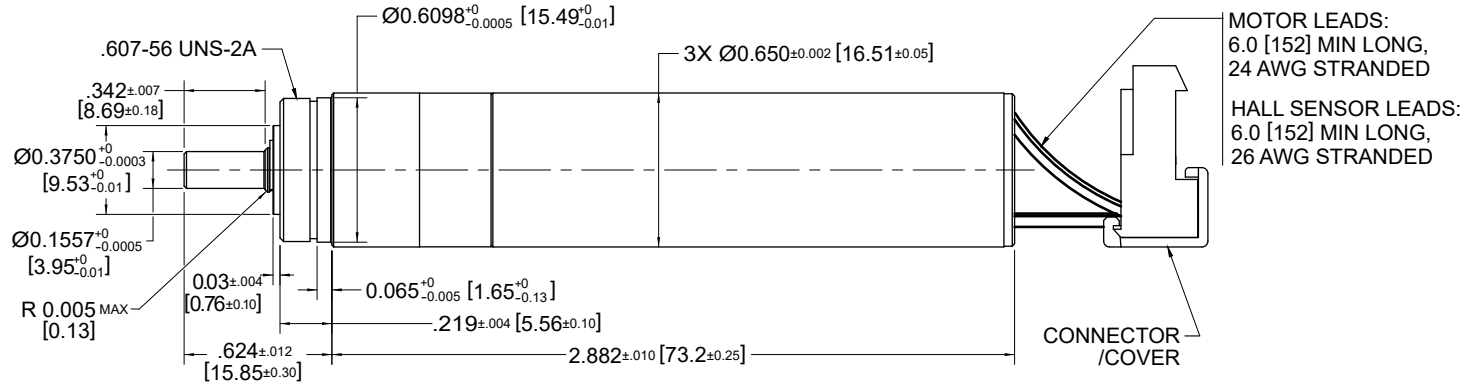

Dimensions in inches [mm]

Electrical Data		Symbol	SMX B0614H4041	Unit
1	Nominal Voltage	U_N	24.0	Volt
2	Optimization Direction	-	Bi-Directional	-
3	No Load Speed	n_o	7,353	rpm
4	Typical No Load Current	I_o	645	mA
5	Max. Continuous Mechanical Power (@25°C)	P_{max}	83.4	W
6	Max. Continuous Current	I_{cs}	4.37	A
7	Max. Continuous Torque	T_{cs}	116.7 (16.5)	mNm (oz-in)
8	Back EMF Constant	k_E	3.26	V/1000 rpm
9	Torque Constant	k_T	28.1 (4.0)	mNm/A (oz-in/A)
10	Motor Regulation	R/k^2	460	10^3/Nms
11	Peak Torque	T_{pk}	1846 (261.4)	mNm (oz-in)
12	Motor Constant	k_M	46.77 (6.66)	mNm/W½ (oz-in/W½)
13	Line to Line Resistance	R_L	0.361	ohms
14	Inductance Phase to Phase	L	0.05	mH
15	Mechanical Time Constant	τ_m	2.55	ms
16	Electrical Time Constant	τ_e	0.139	ms
General Data				
17	Gearhead Ratio	-	6:1	Ratio
18	Ambient Working Temperature Range	-	25 (77)	°C (°F)
19	Max Operating Temperature Range	-	155 (311)	°C (°F)
20	Radial Static Force w/o Shaft Support (max)	-	15.25	lbs
21	Axial Static Force w/o Shaft Support (max)	-	19.17	lbs
22	Thermal Resistance	R_{th}	12.5	°C/W
23	Thermal Time Constant	τ_w	950	s
24	Weight	-	106 (3.74)	g (oz)
25	Rotor Inertia	Jm	12.6 (17.8)	kg-cm² 10^{-4} (oz-in-sec² 10^{-6})
26	Hall Sensor Electrical Phasing	-	60	Electrical °
27	Autoclave Cycles	-	1000+	Cycles

Notes:
- Three phase motor with Wye connections
- Hall sensors: supply voltage 4.5 V - 24 V
- Typical housing material 303 SS
- Motor type has been designed and tested to achieve the stated number of autoclave cycles
- Above parameters specified for 25° C ambient temperature
- Typical shaft material 17-4 PH

Wire	Description
Blue	Phase A
Brown	Phase B
Violet	Phase C
Red	4.5 to 24 Vdc
Yellow	Hall 1
Orange	Hall 2
White	Hall 3
Black	Supply RTN

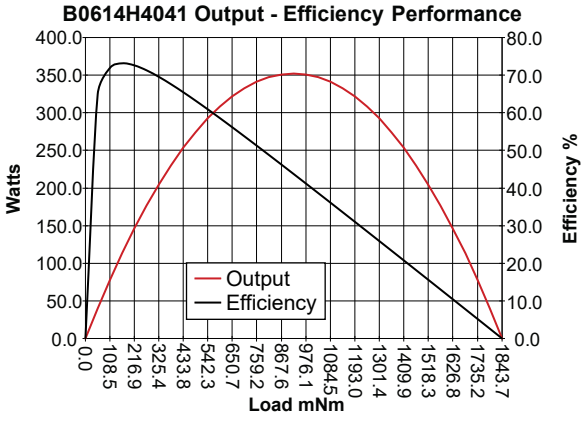

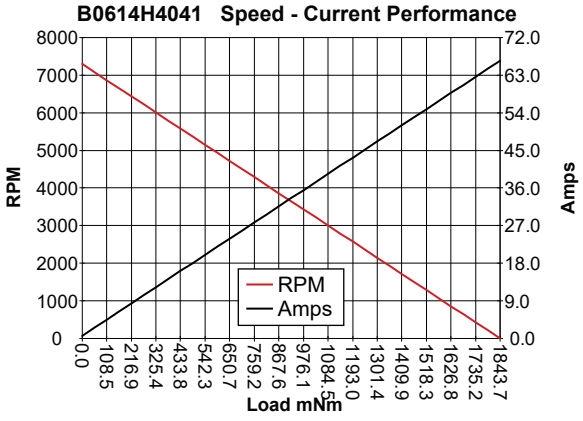

V092020 • © 2020 Portescap. Specifications subject to change without notice.

B0614H4042 Arthroscopic Shaver

Ø 0.65 inch • Brushless Slotted • 24 V

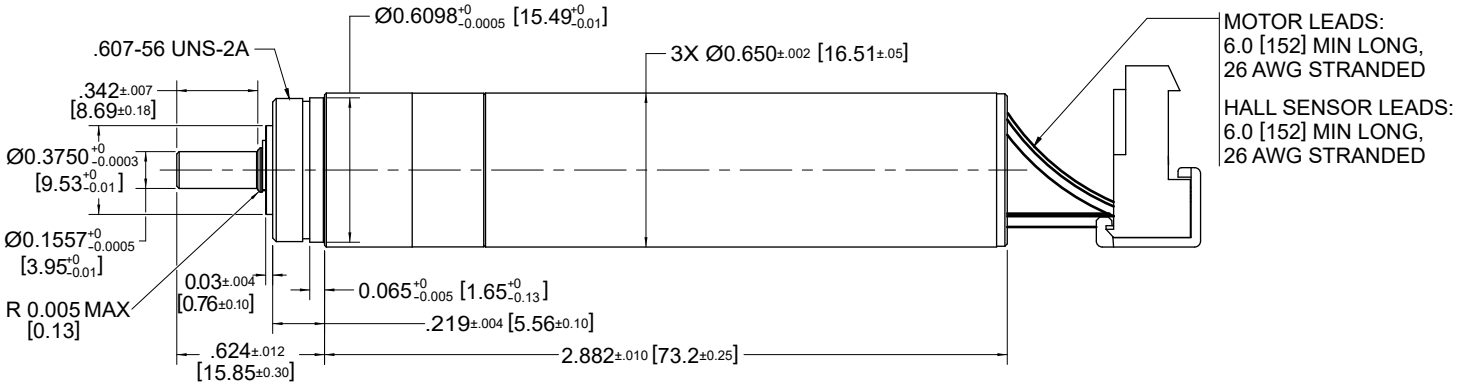

Dimensions in inches [mm]

Electrical Data	Symbol	SMX B0614H4042	Unit
1 Nominal Voltage	U_N	24.0	Volt
2 Optimization Direction	-	Bi-Directional	-
3 No Load Speed	n_o	4,082	rpm
4 Typical No Load Current	I_o	450	mA
5 Max. Continuous Mechanical Power (@25°C)	P_{max}	47.6	W
6 Max. Continuous Current	I_{cs}	2.63	A
7 Max. Continuous Torque	T_{cs}	126.8 (18.0)	mNm (oz-in)
8 Back EMF Constant	k_E	5.88	V/1000 rpm
9 Torque Constant	k_T	50.54 (7.16)	mNm/A (oz-in/A)
10 Motor Regulation	R/k^2	389	10^3/Nms
11 Peak Torque	T_{pk}	1198 (169.6)	mNm (oz-in)
12 Motor Constant	k_M	50.68 (7.23)	mNm/W½ (oz-in/W½)
13 Line to Line Resistance	R_L	0.993	ohms
14 Inductance Phase to Phase	L	0.156	mH
15 Mechanical Time Constant	τ_m	2.15	ms
16 Electrical Time Constant	τ_e	0.157	ms
General Data			
17 Gearhead Ratio	-	6:1	Ratio
18 Ambient Working Temperature Range	-	25 (77)	°C (°F)
19 Max Operating Temperature Range	-	155 (311)	°C (°F)
20 Radial Static Force w/o Shaft Support (max)	-	15.25	lbs
21 Axial Static Force w/o Shaft Support (max)	-	19.17	lbs
22 Thermal Resistance	R_{th}	12.5	°C/W
23 Thermal Time Constant	τ_w	950	s
24 Weight	-	106 (3.74)	g (oz)
25 Rotor Inertia	Jm	12.6 (17.8)	kg-cm² 10^{-4} (oz-in-sec² 10^{-6})
26 Hall Sensor Electrical Phasing	-	60	Electrical °
27 Autoclave Cycles	-	1000+	Cycles

Notes:
- Three phase motor with Wye connections
- Hall sensors: supply voltage 4.5 V - 24 V
- Typical housing material 303 SS
- Motor type has been designed and tested to achieve the stated number of autoclave cycles
- Above parameters specified for 25° C ambient temperature
- Typical shaft material 17-4 PH

Wire	Description
Blue	Phase A
Brown	Phase B
Violet	Phase C
Red	4.5 to 24 Vdc
Yellow	Hall 1
Orange	Hall 2
White	Hall 3
Black	Supply RTN

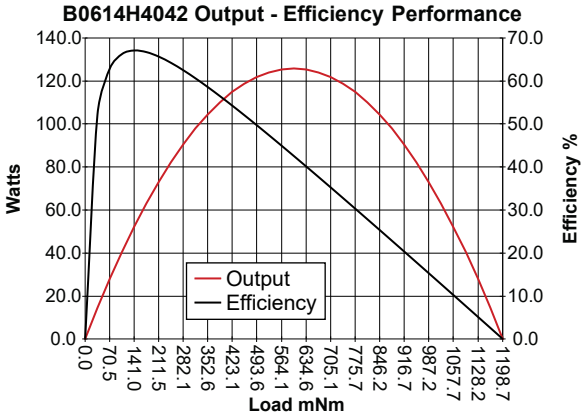

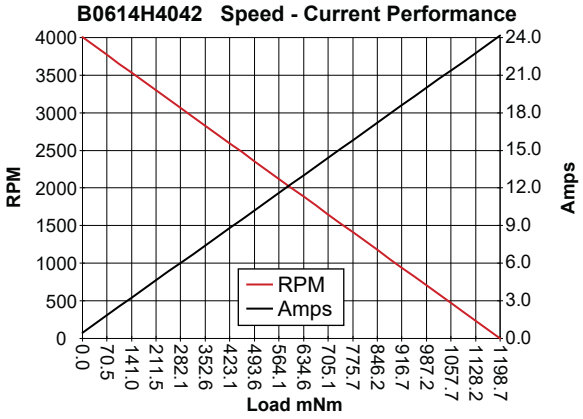

B0912N1016 Small Bone Orthopedic Drill

Ø 0.872 inch • Brushless Slotted • 9.6 V

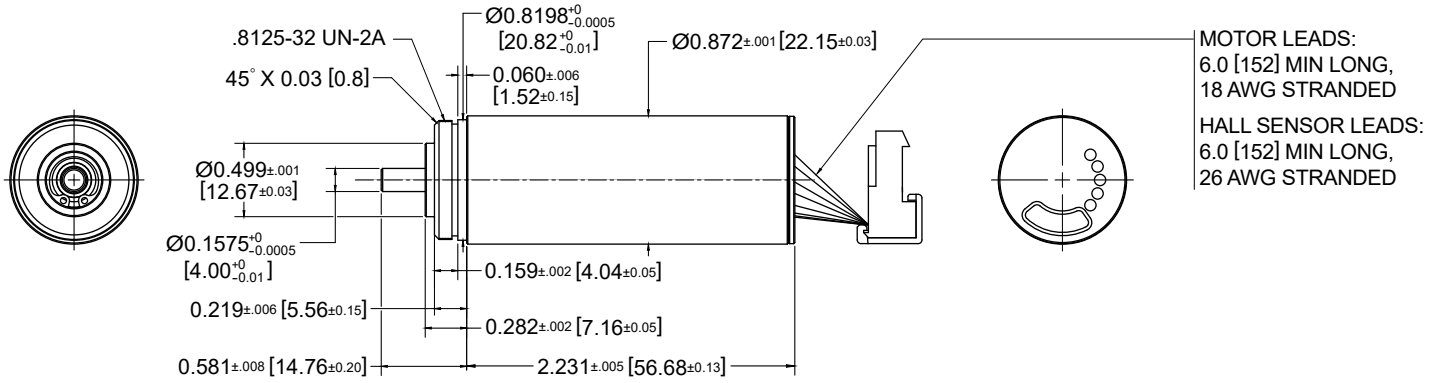

Dimensions in inches [mm]

	Electrical Data	Symbol	SMX B0912N1016	Unit
1	Nominal Voltage	U_N	9.6	Volt
2	Optimization Direction	-	Bi-Directional	-
3	No Load Speed	n_o	38,633	rpm
4	Typical No Load Current	I_o	1053	mA
5	Max. Continuous Mechanical Power (@25°C)	P_{max}	112.5	W
6	Max. Continuous Current	I_{cs}	14.48	A
7	Max. Continuous Torque	T_{cs}	29.4 (4.16)	mNm (oz-in)
8	Back EMF Constant	k_E	0.248	V/1000 rpm
9	Torque Constant	k_T	2.37 (0.336)	mNm/A (oz-in/A)
10	Motor Regulation	R/k^2	7121	10^3/Nms
11	Peak Torque	T_{pk}	564.6 (80.0)	mNm (oz-in)
12	Motor Constant	k_M	11.84 (1.68)	mNm/W½ (oz-in/W½)
13	Line to Line Resistance	R_L	0.040	ohms
14	Inductance Phase to Phase	L	0.009	mH
15	Mechanical Time Constant	τ_m	2.63	ms
16	Electrical Time Constant	τ_e	0.225	ms
	General Data			
17	Gearhead Ratio	-	N/A	Ratio
18	Ambient Working Temperature Range	-	25 (77)	°C (°F)
19	Max Operating Temperature Range	-	155 (311)	°C (°F)
20	Radial Static Force w/o Shaft Support (max)	-	39.48	lbs
21	Axial Static Force w/o Shaft Support (max)	-	8.50	lbs
22	Thermal Resistance	R_{th}	10.0	°C/W
23	Thermal Time Constant	τ_w	926	s
24	Weight	-	145 (5.11)	g (oz)
25	Rotor Inertia	Jm	24.7 (35.0)	kg-cm² 10^{-4} (oz-in-sec² 10^{-6})
26	Hall Sensor Electrical Phasing	-	60	Electrical °
27	Autoclave Cycles	-	1000+	Cycles

Notes:
- Three phase motor with Wye connections
- Hall sensors: supply voltage 4.5 V - 24 V
- Typical housing material 303 SS
- Motor type has been designed and tested to achieve the stated number of autoclave cycles
- Above parameters specified for 25° C ambient temperature
- Typical shaft material 17-4 PH

Wire	Description
Blue	Phase A
Brown	Phase B
Violet	Phase C
Red	4.5 to 24 Vdc
Yellow	Hall 1
Orange	Hall 2
White	Hall 3
Black	Supply RTN

B0912N1016 Output - Efficiency Performance

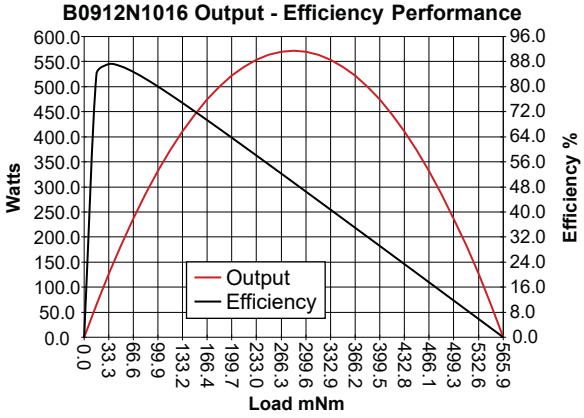

B0912N1016 Speed - Current Performance

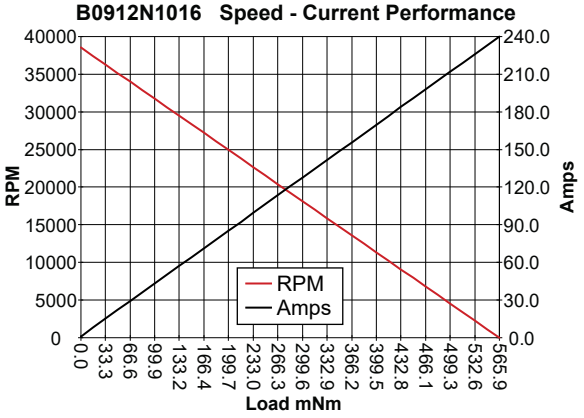

V092020 • © 2020 Portescap. Specifications subject to change without notice.

B0912N4023 Small Bone Orthopedic Drill

Ø 0.872 inch • Brushless Slotted • 9.6 V

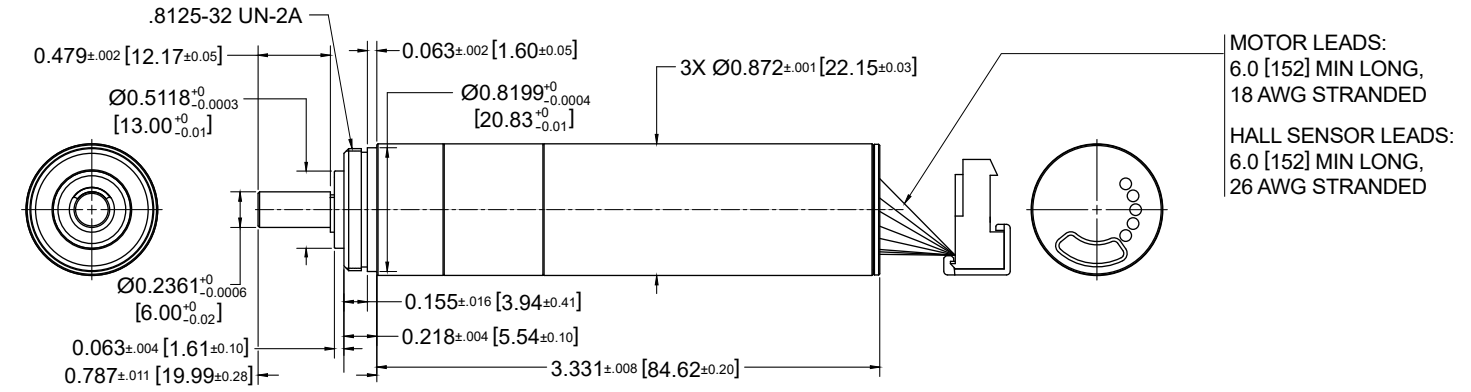

Dimensions in inches [mm]

Electrical Data		Symbol	SMX B0912N4023	Unit
1	Nominal Voltage	U_N	9.6	Volt
2	Optimization Direction	-	Bi-Directional	-
3	No Load Speed	n_o	1,104	rpm
4	Typical No Load Current	I_o	1300	mA
5	Max. Continuous Mechanical Power (@25°C)	P_{max}	90.3	W
6	Max. Continuous Current	I_{cs}	14.48	A
7	Max. Continuous Torque	T_{cs}	833 (118)	mNm (oz-in)
8	Back EMF Constant	k_E	8.75	V/1000 rpm
9	Torque Constant	k_T	67.69 (9.59)	mNm/A (oz-in/A)
10	Motor Regulation	R/k^2	8.73	10^3/Nms
11	Peak Torque	T_{pk}	16007 (2266)	mNm (oz-in)
12	Motor Constant	k_M	11.84 (1.68)	mNm/W½ (oz-in/W½)
13	Line to Line Resistance	R_L	0.040	ohms
14	Inductance Phase to Phase	L	0.009	mH
15	Mechanical Time Constant	τ_m	2.63	ms
16	Electrical Time Constant	τ_e	0.225	ms
General Data				
17	Gearhead Ratio	-	35:1	Ratio
18	Ambient Working Temperature Range	-	25 (77)	°C (°F)
19	Max Operating Temperature Range	-	155 (311)	°C (°F)
20	Radial Static Force w/o Shaft Support (max)	-	47.28	lbs
21	Axial Static Force w/o Shaft Support (max)	-	64.50	lbs
22	Thermal Resistance	R_{th}	10.0	°C/W
23	Thermal Time Constant	τ_w	950	s
24	Weight	-	214 (7.55)	g (oz)
25	Rotor Inertia	Jm	24.7 (35.0)	kg-cm² 10^{-4} (oz-in-sec² 10^{-6})
26	Hall Sensor Electrical Phasing	-	60	Electrical °
27	Autoclave Cycles	-	1000+	Cycles

Notes:
- Three phase motor with Wye connections
- Hall sensors: supply voltage 4.5 V - 24 V
- Typical housing material 303 SS
- Motor type has been designed and tested to achieve the stated number of autoclave cycles
- Above parameters specified for 25° C ambient temperature
- Typical shaft material 17-4 PH

Wire	Description
Blue	Phase A
Brown	Phase B
Violet	Phase C
Red	4.5 to 24 Vdc
Yellow	Hall 1
Orange	Hall 2
White	Hall 3
Black	Supply RTN

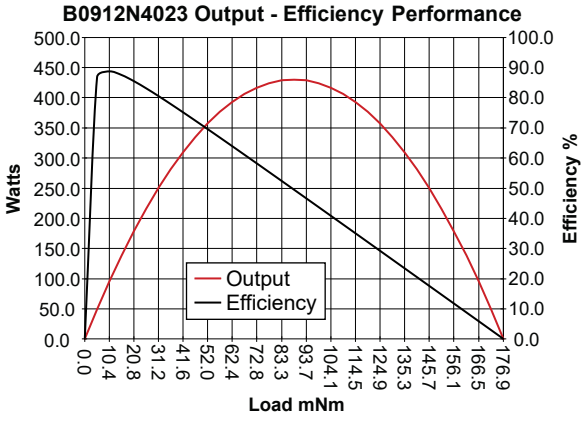

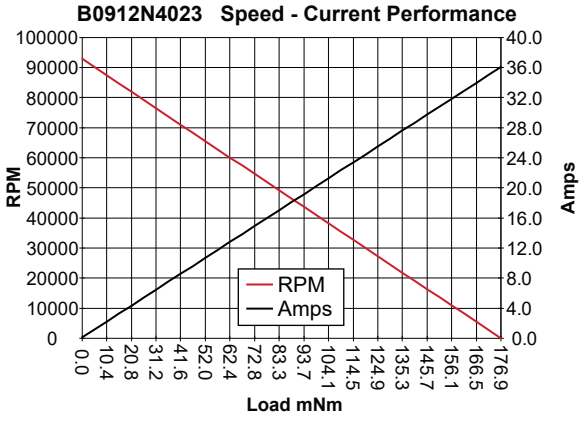

B0912N4024 Small Bone Orthopedic Saw

Ø 0.872 inch • Brushless Slotted • 9.6 V

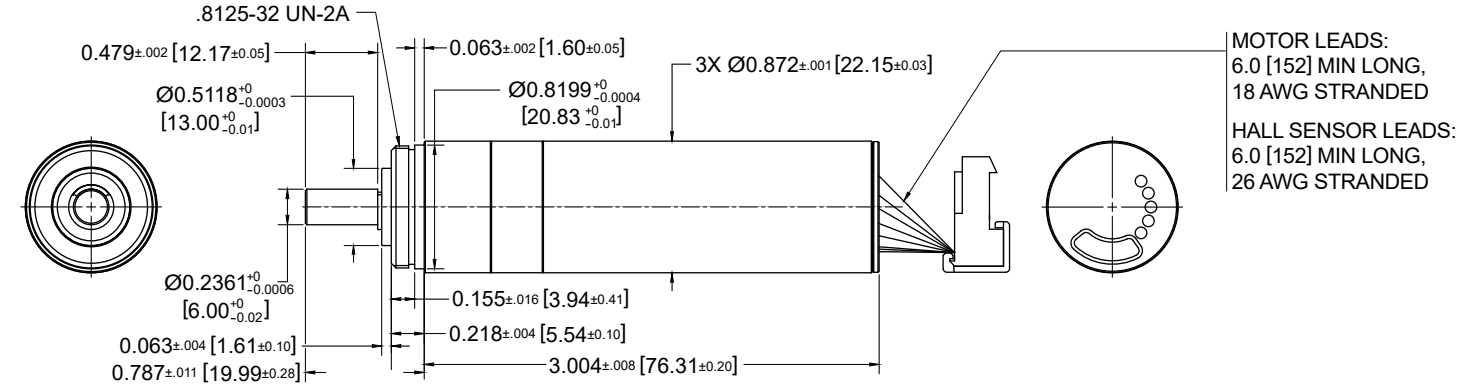

Dimensions in inches [mm]

Electrical Data	Symbol	SMX B0912N4024	Unit
1 Nominal Voltage	U_N	9.6	Volt
2 Optimization Direction	-	Bi-Directional	-
3 No Load Speed	n_o	12,851	rpm
4 Typical No Load Current	I_o	1250	mA
5 Max. Continuous Mechanical Power (@25°C)	P_{max}	111.6	W
6 Max. Continuous Current	I_{cs}	14.52	A
7 Max. Continuous Torque	T_{cs}	88.8 (12.6)	mNm (oz-in)
8 Back EMF Constant	k_E	0.747	V/1000 rpm
9 Torque Constant	k_T	6.42 (0.909)	mNm/A (oz-in/A)
10 Motor Regulation	R/k^2	970	10^3/Nms
11 Peak Torque	T_{pk}	1534.5 (217.3)	mNm (oz-in)
12 Motor Constant	k_M	11.89 (1.68)	mNm/W½ (oz-in/W½)
13 Line to Line Resistance	R_L	0.040	ohms
14 Inductance Phase to Phase	L	0.009	mH
15 Mechanical Time Constant	τ_m	3.77	ms
16 Electrical Time Constant	τ_e	0.225	ms
General Data			
17 Gearhead Ratio	-	3:1	Ratio
18 Ambient Working Temperature Range	-	25 (77)	°C (°F)
19 Max Operating Temperature Range	-	155 (311)	°C (°F)
20 Radial Static Force w/o Shaft Support (max)	-	47.28	lbs
21 Axial Static Force w/o Shaft Support (max)	-	64.50	lbs
22 Thermal Resistance	R_{th}	10.2	°C/W
23 Thermal Time Constant	τ_w	926	s
24 Weight	-	191 (6.74)	g (oz)
25 Rotor Inertia	Jm	24.7 (35.0)	kg-cm² 10^{-4} (oz-in-sec² 10^{-6})
26 Hall Sensor Electrical Phasing	-	60	Electrical °
27 Autoclave Cycles	-	1000+	Cycles

Notes:
- Three phase motor with Wye connections
- Hall sensors: supply voltage 4.5 V - 24 V
- Typical housing material 303 SS
- Motor type has been designed and tested to achieve the stated number of autoclave cycles
- Above parameters specified for 25° C ambient temperature
- Typical shaft material 17-4 PH

Wire	Description
Blue	Phase A
Brown	Phase B
Violet	Phase C
Red	4.5 to 24 Vdc
Yellow	Hall 1
Orange	Hall 2
White	Hall 3
Black	Supply RTN

B0912N4024 Output - Efficiency Performance

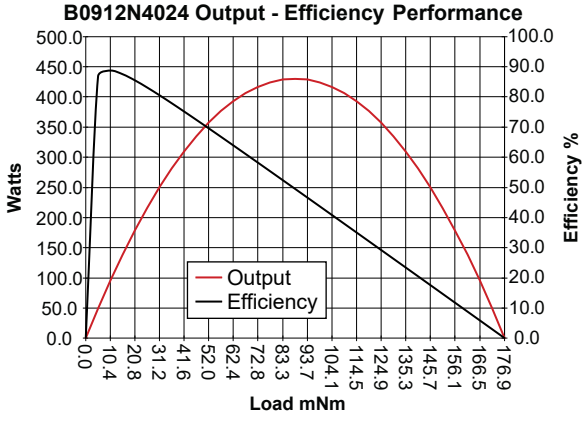

B0912N4024 Speed - Current Performance

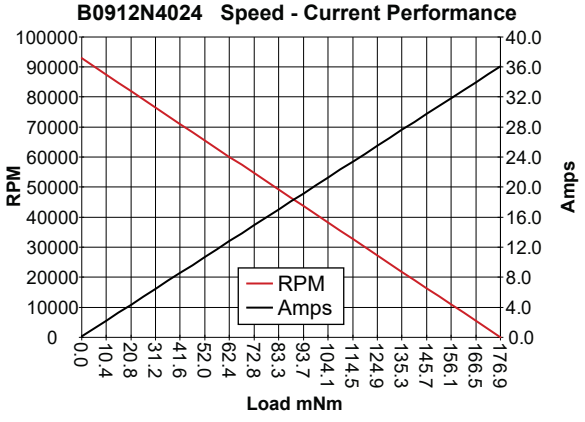

V092020 • © 2020 Portescap. Specifications subject to change without notice.

B1112N4004 Large Bone Orthopedic Drill/Reamer

Ø 1.1 inch • Brushless Slotted • 14.4 V

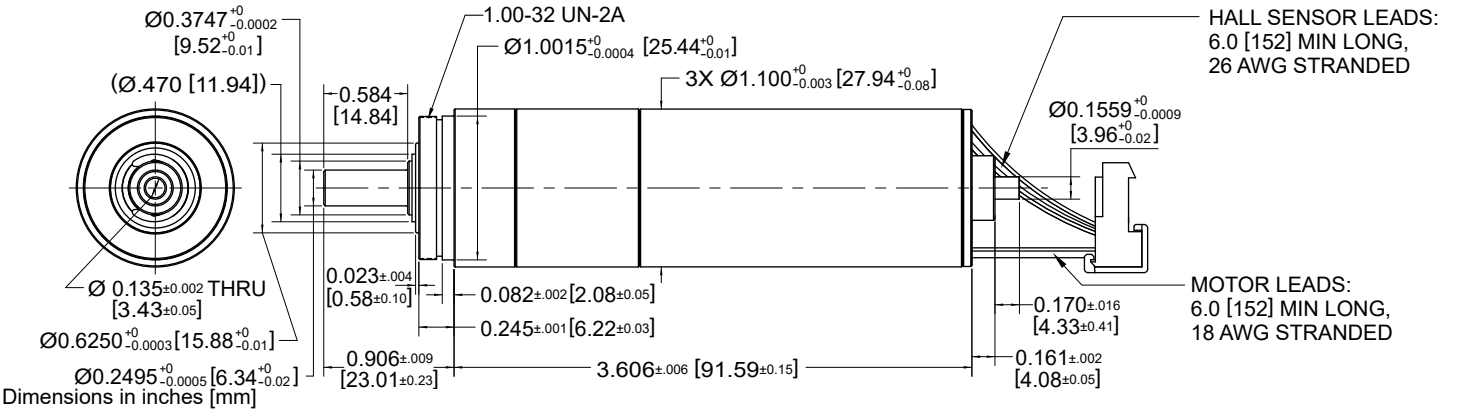

Dimensions in inches [mm]

Electrical Data	Symbol	SMX B1112N4004	Unit
1 Nominal Voltage	U_N	14.4	Volt
2 Optimization Direction	-	Bi-Directional	-
3 No Load Speed	n_o	938	rpm
4 Typical No Load Current	I_o	1090	mA
5 Max. Continuous Mechanical Power (@25°C)	P_{max}	85.2	W
6 Max. Continuous Current	I_{cs}	9.21	A
7 Max. Continuous Torque	T_{cs}	937.1 (132.7)	mNm (oz-in)
8 Back EMF Constant	k_E	15.34	V/1000 rpm
9 Torque Constant	k_T	118.7 (16.81)	mNm/A (oz-in/A)
10 Motor Regulation	R/k^2	8.4	10^3/Nms
11 Peak Torque	T_{pk}	14231 (2015)	mNm (oz-in)
12 Motor Constant	k_M	344 (48.7)	mNm/W½ (oz-in/W½)
13 Line to Line Resistance	R_L	0.119	ohms
14 Inductance Phase to Phase	L	0.057	mH
15 Mechanical Time Constant	τ_m	1.79	ms
16 Electrical Time Constant	τ_e	0.479	ms
General Data			
17 Gearhead Ratio	-	16:1	Ratio
18 Ambient Working Temperature Range	-	25 (77)	°C (°F)
19 Max Operating Temperature Range	-	155 (311)	°C (°F)
20 Radial Static Force w/o Shaft Support (max)	-	17.46	lbs
21 Axial Static Force w/o Shaft Support (max)	-	33.83	lbs
22 Thermal Resistance	R_{th}	8.3	°C/W
23 Thermal Time Constant	τ_w	900	s
24 Weight	-	354 (12.49)	g (oz)
25 Rotor Inertia	Jm	84.7 (120)	kg-cm² 10^{-4} (oz-in-sec² 10^{-6})
26 Hall Sensor Electrical Phasing	-	60	Electrical °
27 Autoclave Cycles	-	1000+	Cycles

Notes:
- Three phase motor with Wye connections
- Hall sensors: supply voltage 4.5 V - 24 V
- Typical housing material 303 SS
- Motor type has been designed and tested to achieve the stated number of autoclave cycles
- Above parameters specified for 25° C ambient temperature
- Typical shaft material 17-4 PH

Wire	Description
Blue	Phase A
Brown	Phase B
Violet	Phase C
Red	4.5 to 24 Vdc
Yellow	Hall 1
Orange	Hall 2
White	Hall 3
Black	Supply RTN

B1112N4004 Output - Efficiency Performance

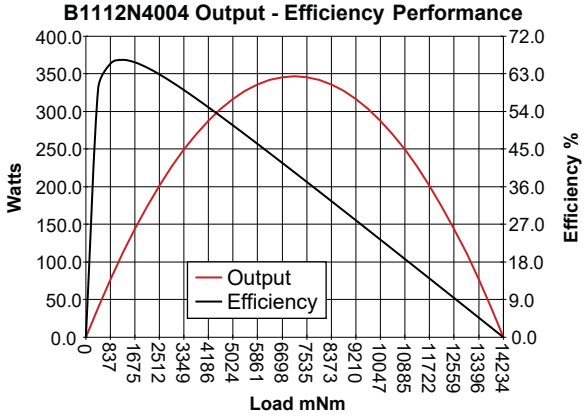

B1112N4004 Speed - Current Performance

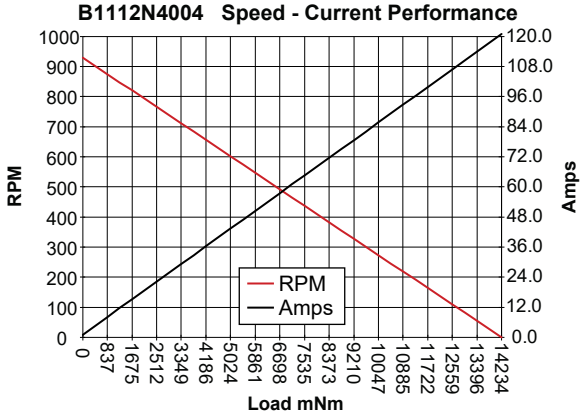

B1210N1021 Large Bone Orthopedic Drill/Wire Driver

Ø 1.24 inch • Brushless Slotted • 9.6 V

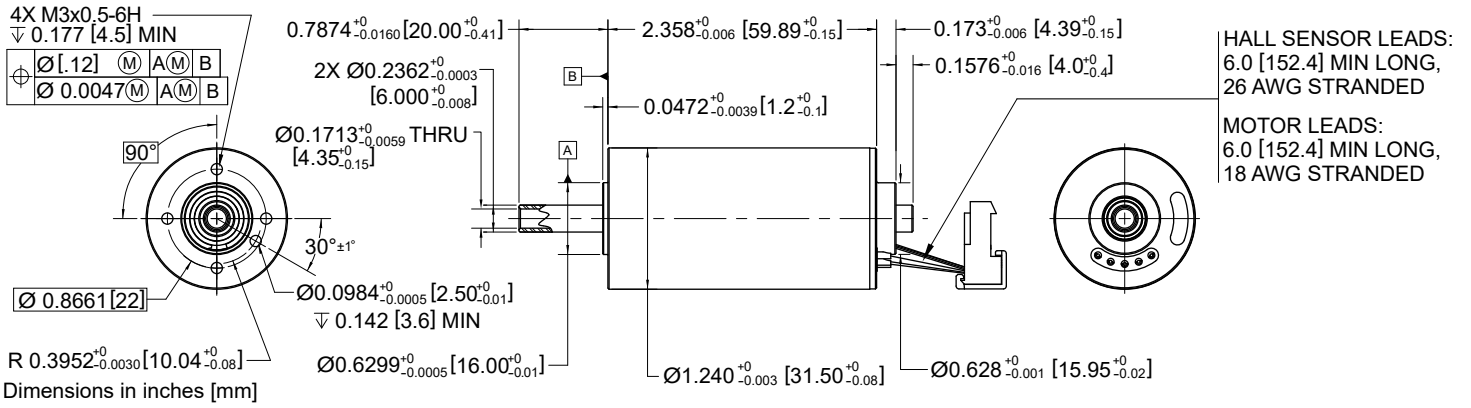

Dimensions in inches [mm]

Electrical Data		Symbol	SMX B1210N1021	Unit
1	Nominal Voltage	U_N	9.6	Volt
2	Optimization Direction	-	Bi-Directional	-
3	No Load Speed	n_o	16,800	rpm
4	Typical No Load Current	I_o	1267	mA
5	Max. Continuous Mechanical Power (@25°C)	P_{max}	123.4	W
6	Max. Continuous Current	I_{cs}	16.1	A
7	Max. Continuous Torque	T_{cs}	83.1 (11.77)	mNm (oz-in)
8	Back EMF Constant	k_E	0.566	V/1000 rpm
9	Torque Constant	k_T	5.41 (0.77)	mNm/A (oz-in/A)
10	Motor Regulation	R/k^2	1298	10^3/Nms
11	Peak Torque	T_{pk}	1365.4 (193.4)	mNm (oz-in)
12	Motor Constant	k_M	27.73 (3.93)	mNm/W½ (oz-in/W½)
13	Line to Line Resistance	R_L	0.038	ohms
14	Inductance Phase to Phase	L	0.018	mH
15	Mechanical Time Constant	τ_m	1.85	ms
16	Electrical Time Constant	τ_e	0.474	ms
General Data				
17	Gearhead Ratio	-	N/A	Ratio
18	Ambient Working Temperature Range	-	25 (77)	°C (°F)
19	Max Operating Temperature Range	-	155 (311)	°C (°F)
20	Radial Static Force w/o Shaft Support (max)	-	80.28	lbs
21	Axial Static Force w/o Shaft Support (max)	-	27.17	lbs
22	Thermal Resistance	R_{th}	8.7	°C/W
23	Thermal Time Constant	τ_w	975	s
24	Weight	-	265 (9.35)	g (oz)
25	Rotor Inertia	Jm	133 (189)	kg-cm² 10^{-4} (oz-in-sec² 10^{-6})
26	Hall Sensor Electrical Phasing	-	60	Electrical °
27	Autoclave Cycles	-	1000+	Cycles

Notes:
- Three phase motor with Wye connections
- Hall sensors: supply voltage 4.5 V - 24 V
- Typical housing material 303 SS
- Motor type has been designed and tested to achieve the stated number of autoclave cycles
- Above parameters specified for 25° C ambient temperature
- Typical shaft material 17-4 PH

Wire	Description
Blue	Phase A
Brown	Phase B
Violet	Phase C
Red	4.5 to 24 Vdc
Yellow	Hall 1
Orange	Hall 2
White	Hall 3
Black	Supply RTN

B1210N1021 Output - Efficiency Performance

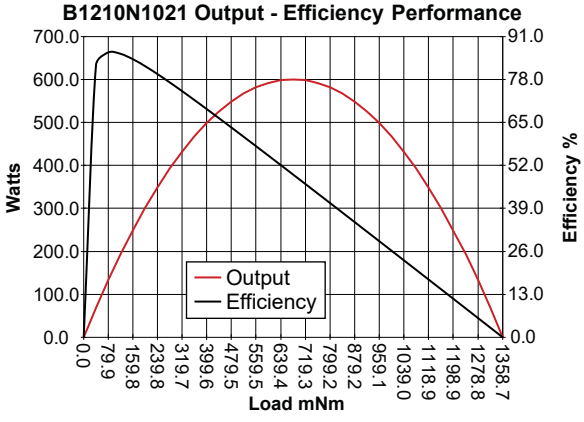

B1210N1021 Speed - Current Performance

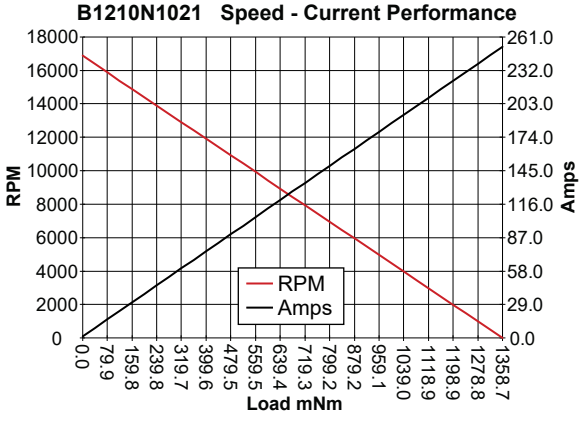

V092020 • © 2020 Portescap. Specifications subject to change without notice.

B1210N1023 Large Bone Orthopedic Drill/Wire Driver

Ø 1.24 inch • Brushless Slotted • 14.4 V

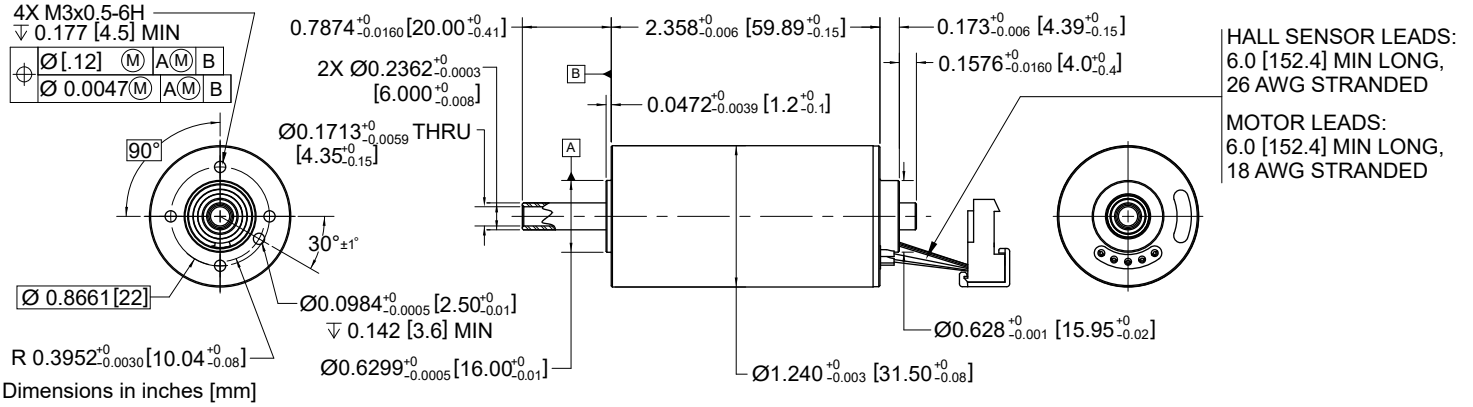

Dimensions in inches [mm]

Electrical Data		Symbol	SMX B1210N1023	Unit
1	Nominal Voltage	U_N	14.4	Volt
2	Optimization Direction	-	Bi-Directional	-
3	No Load Speed	n_o	15,700	rpm
4	Typical No Load Current	I_o	760	mA
5	Max. Continuous Mechanical Power (@25°C)	P_{max}	130.4	W
6	Max. Continuous Current	I_{cs}	11.3	A
7	Max. Continuous Torque	T_{cs}	95.9 (13.58)	mNm (oz-in)
8	Back EMF Constant	k_E	0.93	V/1000 rpm
9	Torque Constant	k_T	8.88 (1.26)	mNm/A (oz-in/A)
10	Motor Regulation	R/k^2	976	10^3/Nms
11	Peak Torque	T_{pk}	1660.8 (235.2)	mNm (oz-in)
12	Motor Constant	k_M	32.01 (4.53)	mNm/W½ (oz-in/W½)
13	Line to Line Resistance	R_L	0.077	ohms
14	Inductance Phase to Phase	L	0.045	mH
15	Mechanical Time Constant	τ_m	1.39	ms
16	Electrical Time Constant	τ_e	0.584	ms
General Data				
17	Gearhead Ratio	-	N/A	Ratio
18	Ambient Working Temperature Range	-	25 (77)	°C (°F)
19	Max Operating Temperature Range	-	155 (311)	°C (°F)
20	Radial Static Force w/o Shaft Support (max)	-	80.28	lbs
21	Axial Static Force w/o Shaft Support (max)	-	27.17	lbs
22	Thermal Resistance	R_{th}	8.7	°C/W
23	Thermal Time Constant	τ_w	975	s
24	Weight	-	267 (9.42)	g (oz)
25	Rotor Inertia	Jm	133 (189)	kg-cm² 10^{-4} (oz-in-sec² 10^{-6})
26	Hall Sensor Electrical Phasing	-	60	Electrical °
27	Autoclave Cycles	-	1000+	Cycles

Notes:
- Three phase motor with Wye connections
- Hall sensors: supply voltage 4.5 V - 24 V
- Typical housing material 303 SS
- Motor type has been designed and tested to achieve the stated number of autoclave cycles
- Above parameters specified for 25° C ambient temperature
- Typical shaft material 17-4 PH

Wire	Description
Blue	Phase A
Brown	Phase B
Violet	Phase C
Red	4.5 to 24 Vdc
Yellow	Hall 1
Orange	Hall 2
White	Hall 3
Black	Supply RTN

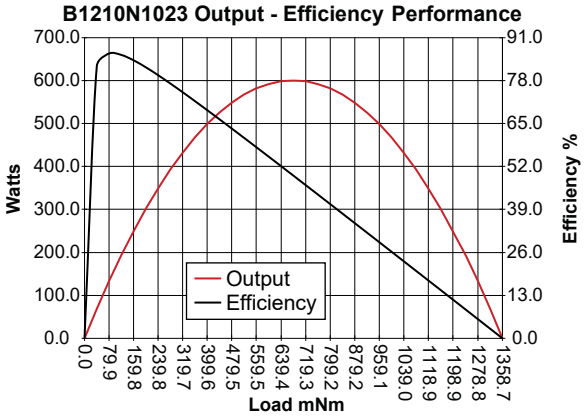

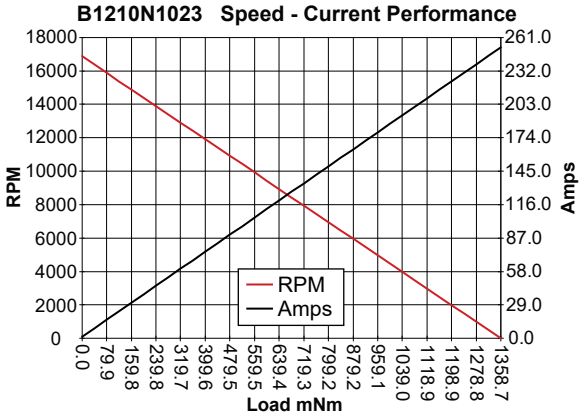

B1210N1025 Large Bone Orthopedic Saw/Reamer

Ø 1.24 inch • Brushless Slotted • 9.6 V

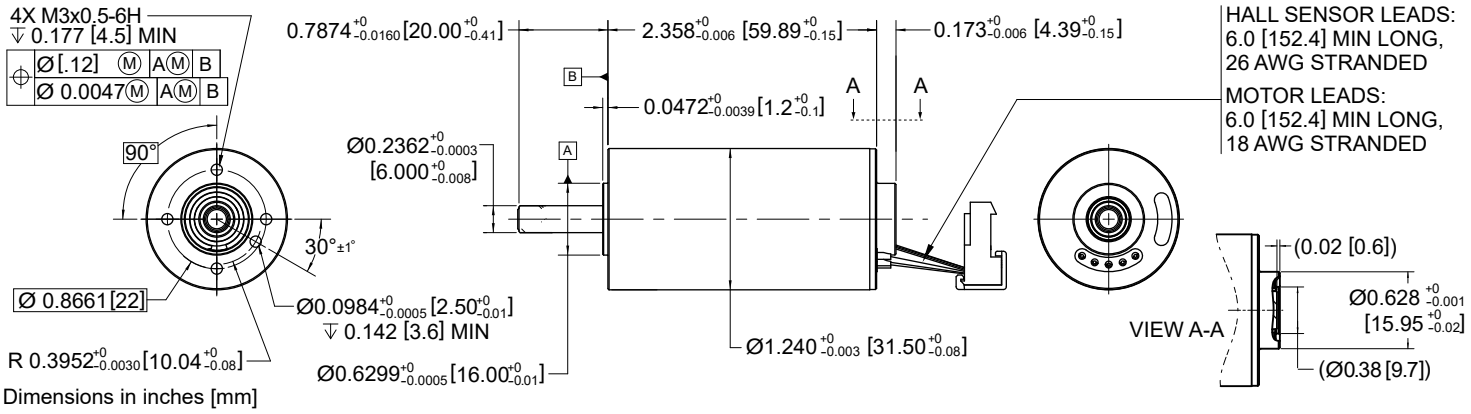

Dimensions in inches [mm]

Electrical Data		Symbol	SMX B1210N1025	Unit
1	Nominal Voltage	U_N	9.6	Volt
2	Optimization Direction	-	Bi-Directional	-
3	No Load Speed	n_o	16,800	rpm
4	Typical No Load Current	I_o	1267	mA
5	Max. Continuous Mechanical Power (@25°C)	P_{max}	123.4	W
6	Max. Continuous Current	I_{cs}	16.1	A
7	Max. Continuous Torque	T_{cs}	83.1 (11.77)	mNm (oz-in)
8	Back EMF Constant	k_E	0.566	V/1000 rpm
9	Torque Constant	k_T	5.41 (0.77)	mNm/A (oz-in/A)
10	Motor Regulation	R/k^2	1298	10^3/Nms
11	Peak Torque	T_{pk}	1365.4 (193.4)	mNm (oz-in)
12	Motor Constant	k_M	27.73 (3.93)	mNm/W½ (oz-in/W½)
13	Line to Line Resistance	R_L	0.038	ohms
14	Inductance Phase to Phase	L	0.018	mH
15	Mechanical Time Constant	τ_m	1.85	ms
16	Electrical Time Constant	τ_e	0.474	ms
General Data				
17	Gearhead Ratio	-	N/A	Ratio
18	Ambient Working Temperature Range	-	25 (77)	°C (°F)
19	Max Operating Temperature Range	-	155 (311)	°C (°F)
20	Radial Static Force w/o Shaft Support (max)	-	80.28	lbs
21	Axial Static Force w/o Shaft Support (max)	-	27.17	lbs
22	Thermal Resistance	R_{th}	8.7	°C/W
23	Thermal Time Constant	τ_w	975	s
24	Weight	-	267 (9.42)	g (oz)
25	Rotor Inertia	Jm	133 (189)	kg-cm² 10^{-4} (oz-in-sec² 10^{-6})
26	Hall Sensor Electrical Phasing	-	60	Electrical °
27	Autoclave Cycles	-	1000+	Cycles

Notes:
- Three phase motor with Wye connections
- Hall sensors: supply voltage 4.5 V - 24 V
- Typical housing material 303 SS
- Motor type has been designed and tested to achieve the stated number of autoclave cycles
- Above parameters specified for 25° C ambient temperature
- Typical shaft material 17-4 PH

Wire	Description
Blue	Phase A
Brown	Phase B
Violet	Phase C
Red	4.5 to 24 Vdc
Yellow	Hall 1
Orange	Hall 2
White	Hall 3
Black	Supply RTN

B1210N1025 Output - Efficiency Performance

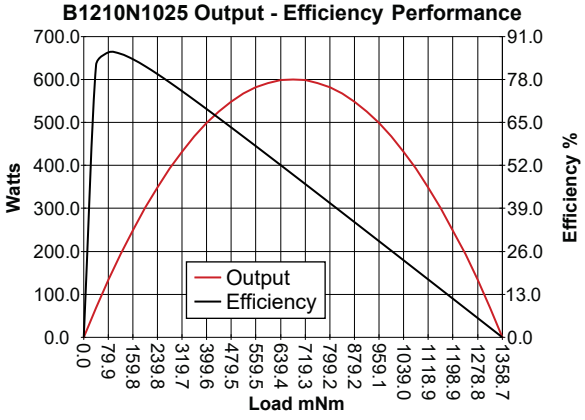

B1210N1025 Speed - Current Performance

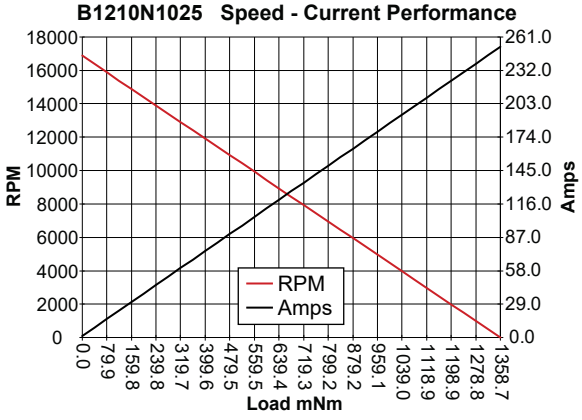

V092020 • © 2020 Portescap. Specifications subject to change without notice.

B1210N1027 Large Bone Orthopedic Saw/Reamer

Ø 1.24 inch • Brushless Slotted • 14.4 V

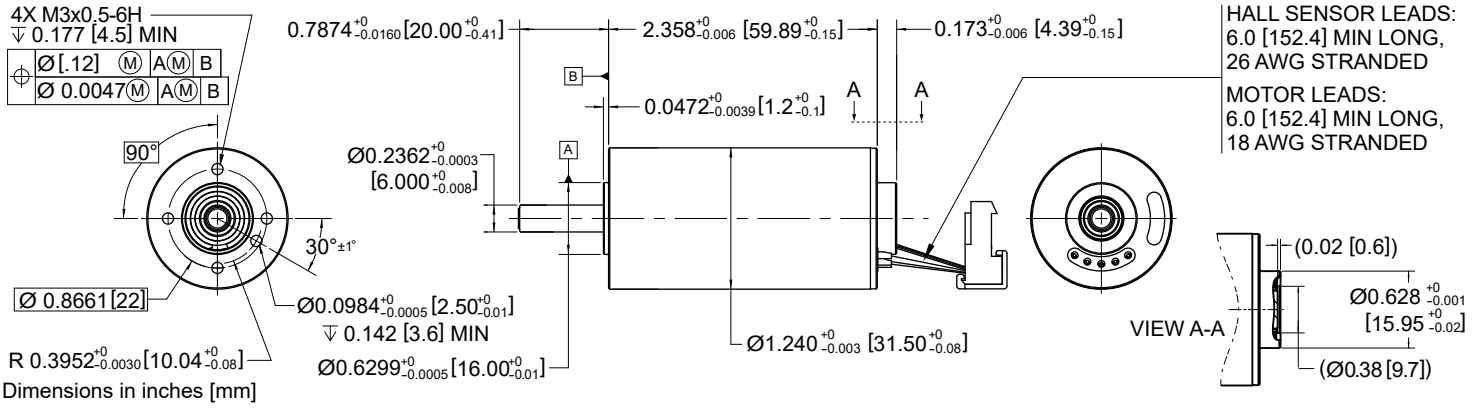

Dimensions in inches [mm]

Electrical Data		Symbol	SMX B1210N1027	Unit
1	Nominal Voltage	U_N	14.4	Volt
2	Optimization Direction	-	Bi-Directional	-
3	No Load Speed	n_o	15,700	rpm
4	Typical No Load Current	I_o	760	mA
5	Max. Continuous Mechanical Power (@25°C)	P_{max}	130.4	W
6	Max. Continuous Current	I_{cs}	11.19	A
7	Max. Continuous Torque	T_{cs}	95.9 (13.58)	mNm (oz-in)
8	Back EMF Constant	k_E	0.93	V/1000 rpm
9	Torque Constant	k_T	8.88 (1.26)	mNm/A (oz-in/A)
10	Motor Regulation	R/k^2	976	10^3/Nms
11	Peak Torque	T_{pk}	1660.8 (235.2)	mNm (oz-in)
12	Motor Constant	k_M	32.01 (4.53)	mNm/W½ (oz-in/W½)
13	Line to Line Resistance	R_L	0.077	ohms
14	Inductance Phase to Phase	L	0.045	mH
15	Mechanical Time Constant	τ_m	1.39	ms
16	Electrical Time Constant	τ_e	0.584	ms
General Data				
17	Gearhead Ratio	-	N/A	Ratio
18	Ambient Working Temperature Range	-	25 (77)	°C (°F)
19	Max Operating Temperature Range	-	155 (311)	°C (°F)
20	Radial Static Force w/o Shaft Support (max)	-	80.28	lbs
21	Axial Static Force w/o Shaft Support (max)	-	27.17	lbs
22	Thermal Resistance	R_{th}	8.7	°C/W
23	Thermal Time Constant	τ_w	975	s
24	Weight	-	267 (9.42)	g (oz)
25	Rotor Inertia	Jm	133 (189)	kg-cm² 10^{-4} (oz-in-sec² 10^{-6})
26	Hall Sensor Electrical Phasing	-	60	Electrical °
27	Autoclave Cycles	-	1000+	Cycles

Notes:
- Three phase motor with Wye connections
- Hall sensors: supply voltage 4.5 V - 24 V
- Typical housing material 303 SS
- Motor type has been designed and tested to achieve the stated number of autoclave cycles
- Above parameters specified for 25° C ambient temperature
- Typical shaft material 17-4 PH

Wire	Description
Blue	Phase A
Brown	Phase B
Violet	Phase C
Red	4.5 to 24 Vdc
Yellow	Hall 1
Orange	Hall 2
White	Hall 3
Black	Supply RTN

B1210N1027 Output - Efficiency Performance

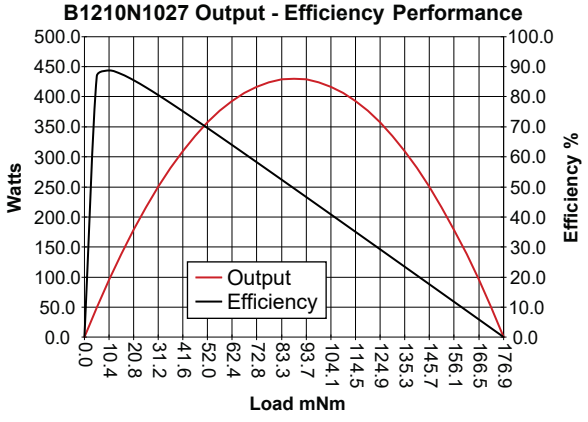

B1210N1027 Speed - Current Performance

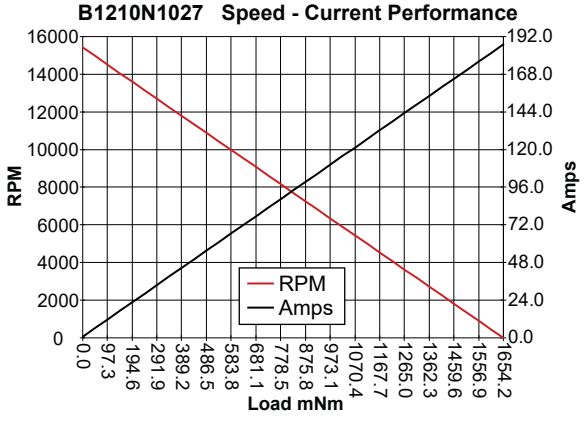

CNT1530

SMS Controller

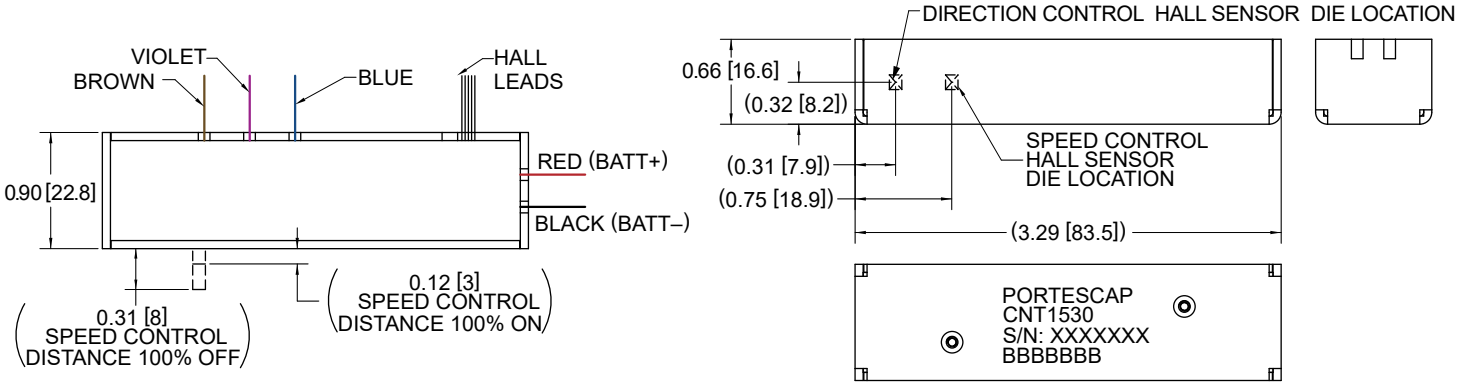

Dimensions in inches [mm]

Electrical Data	CNT1530	Unit
1 Min. Operating Voltage	9	Volt
2 Max. Operating Voltage	15	Volt
3 Standby Current	40	mA DC
4 Current Limit {1}	>75 for >10 ms	A DC
5 Max. Continuous Input Power	300	W
6 Continuous Output Current	20	A DC
Operating Modes		
7 Control Method	Open Loop Speed	
8 Switching Waveform	Trapezoidal	
9 Feedback Type	Sensored	
Inputs		
10 Hall Sensors	H1, H2, H3	
11 Power Input	BATT+, BATT-	
12 Magnetic Triggers	Direction (FD/REV), Speed (0-100% PWM)	
13 Recommended Speed Magnet Grade {2}	SmCo 1:5	
14 Recommended Speed Magnet Dimensions	4.76 x 1.52 (0.188" x 0.060") Dia x Thick	mm (in)
15 Recommended Direction Magnet Grade {2}	SmCo 1:5	
16 Recommended Direction Magnet Dimension	3.18 x 3.18 (0.125" x 0.125") Dia x Thick	mm (in)
Outputs		
17 Phase Leads	A, B, C	
Environmental		
18 Maximum Storage Temperature	150 (302)	°C (°F)
19 Autoclave Cycles	1,000	
Mechanical		
20 Housing Material	Aluminum	
21 Dimensions	22.8 x 83.5 x 16.6 (0.90 x 3.29 x 0.66)	mm (in)
22 Weight	70 (2.5)	g (oz)
23 Wire Insulation Material	PTFE	
24 Power Lead AWG	18	
25 Hall Sensor Lead AWG	26	

Notes:

1. Current limit allows brief excursions beyond 75ADC so long as they are less than 10ms in length. The response time is dependent upon the slew rate of the current excursion, and the current limit features is intended to prevent against prolonged motor stall conditions from inducing further damage in the system.
2. Recommended SmCo 1:5 Disk Magnets are suggestions for the appropriate magnet to incorporate into the speed trigger and direction switch in the customer's handpiece. Please contact Portescap with further specification questions.

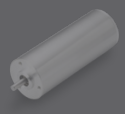
Brushless dc motors

Brush dc motors

Disc magnet motors

Can stack motors

Can stack linear actuators

Gearheads

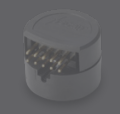
Encoders

Brush DC Motors

Featuring a permanent magnet, coreless design, our brush DC motors deliver high efficiency and power density in a small, lightweight package. Built of high-quality materials for optimal performance, these motors offer a low moment of inertia, low friction and a long commutator life. They're perfect for compact applications requiring high acceleration, torque and efficiency, with no cogging.

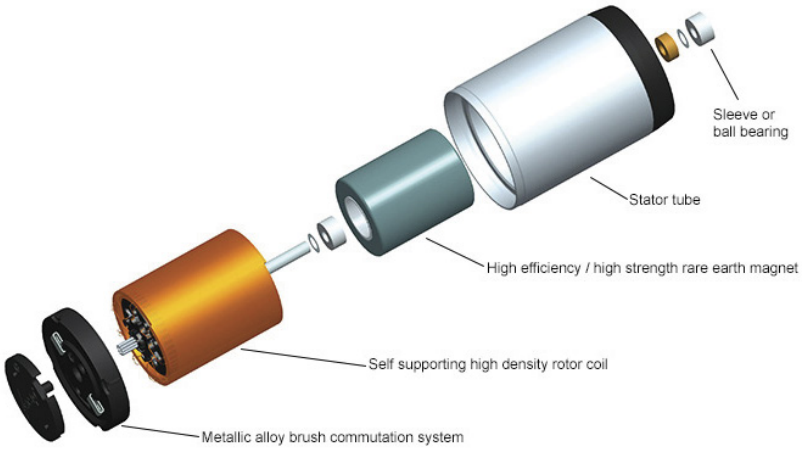

Compact, Efficient, Versatile Performance

Feature	Details	Application Advantages
Ultra-compact design	• Exceptional power density • High torque-to-volume ratio • Lightweight • Excellent heat dissipation	• Greater design flexibility • User comfort and convenience in handheld applications
Coreless rotor	• Ironless, self-supporting coil • Minimal air gaps • No inactive coil heads	• High acceleration, low moment of inertia • Low friction, low starting voltage • No cogging • No iron losses
Precious metal commutation system	• Low contact resistance, low friction • Available with REE coils	• Low no-load current, low starting voltage • Reduced electro erosion for longer brush lifetime
Graphite-copper commutation	• High current carrying capacity • Available with REE coils	• Perfect for boost in start-stop applications or incremental motions • Reduced electro erosion for longer brush lifetime
Neodymium permanent magnet	• High magnetic flux • Exceptional resistance to demagnetization	• High power and efficiency in a small, lightweight package • Linear speed-torque curve • Consistent power density over the motor lifetime
Alnico permanent magnet	• Medium magnetic flux	• Low magnetic flux leakage • Cost-effective • Linear speed-torque curve • Consistent power density over the motor lifetime

Ideal for Small, Portable and Handheld Devices

Medical devices & clinical diagnostics
- Laboratory automation
- Infusion systems
- Insulin pumps
- Diagnostic analyzers
- Miniature pumps

Instrumentation
- Dosing & dispensing systems
- Gas detection
- Land surveying
- Microscopes
- Explosive trace detection systems

Automation
- Humanoid robots

Other
- Power hand tools
- Rotary tattoo machines
- Valve actuation

Meet your Application's Working Point Requirements

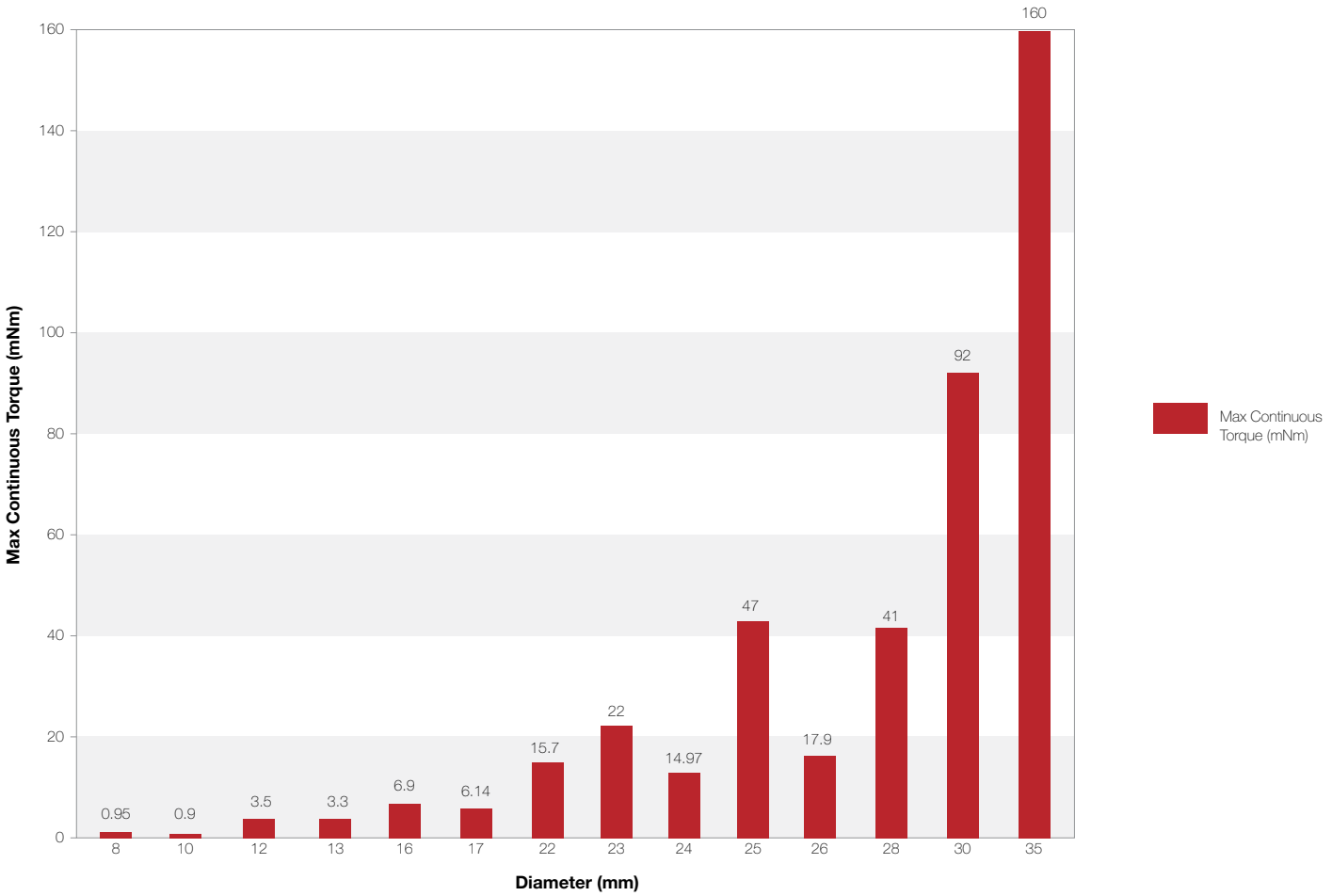

For complete product and application details, visit **portescap.com/brush-dc**

08GS61

Ø 8 mm • Precious metal commutation • 0.65 mNm

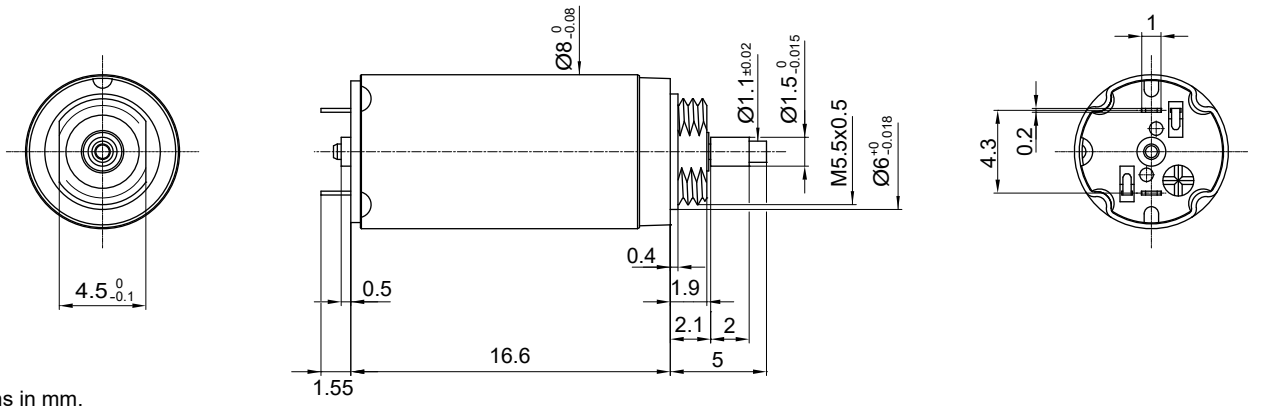

Dimensions in mm.

Electrical Data	Symbol	08GS61 •••• .3 107	105	105C	Unit
1 Nominal Voltage	V	2	4.5	6	Volt
2 No-Load Speed	n_0	7,000	10,670	11,000	rpm
3 No-Load Current	I_0	6.0	4.0	3.0	mA
4 Terminal Resistance	R	12.6	30.0	45.8	Ω
5 Output Power	$P_{2max.}$	0.5	0.5	0.5	W
6 Stall Torque	mNm	0.42 (0.06)	0.59 (0.09)	0.64 (0.1)	mNm (oz-in)
7 Efficiency	$h_{max.}$	65	70	72	%
8 Max Continuous Speed	$n_{e\ max.}$	10,000	10,000	10,000	rpm
9 Max Continuous Torque	$M_{e\ max.}$	0.64 (0.1)	0.64 (0.1)	0.66 (0.1)	mNm (oz-in)
10 Max Continuous Current	$I_{e\ max.}$	0.25	0.17	0.13	A
11 Back-EMF Constant	k_E	0.28	0.41	0.53	mV/rpm
12 Torque Constant	k_M	2.63	3.92	5.10	mNm/A
13 Motor Regulation	R/k^2	1,820.0	1,950.0	1,760.0	10^3/Nms
14 Friction Torque	T_F	0.02 (0.01)	0.02 (0.01)	0.02 (0.01)	mNm (oz-in)
15 Rotor Inductance	L	0.06	0.11	0.20	mH
16 Mechanical Time Constant	τ_m	5.5	5.9	5.3	ms
17 Rotor Inertia	J	0.03	0.03	0.03	g-cm²

General Data			
18 Thermal Resistance (rotor/body)	R_{th1}/R_{th2}	20/100	°C/W
19 Thermal Time Constant (rotor/stator)	t_{W1}/t_{W2}	5/100	S
20 Operating Temperature Range:	motor	-30°C to 85°C (-22°F to 185°F)	°C (°F)
	rotor	100°C (212°F)	°C (°F)
21 Shaft Load Max.:		With sleeve bearings	
(2 mm. from bearing)	-radial	0.5 (1.8)	N (oz)
	-axial	30 (107.9)	N (oz)
22 Shaft Play:	-radial	<0.015 (0.0006)	mm (inch)
	-axial	0.100 (0.0039)	mm (inch)
23 Weight	g	3.8 (0.14)	g (oz)
24 Commutation Segments	-	5	segments

Execution Table

Gearbox	Single Shaft
R10	16
R08	Upon Request

No Load Speed vs. Torque

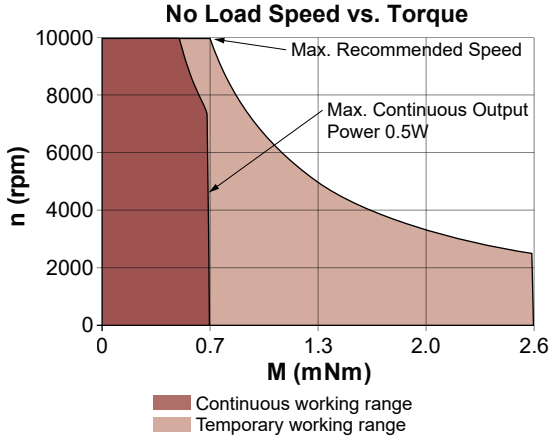

▶ Motor shaft rotates CW when seen from motor front face when +ve and -ve supply is given to respective terminals.

V092020 • © 2020 Portescap. Specifications subject to change without notice.

10NS61 Athlonix™

Ø 10 mm • Precious metal commutation • 0.9 mNm

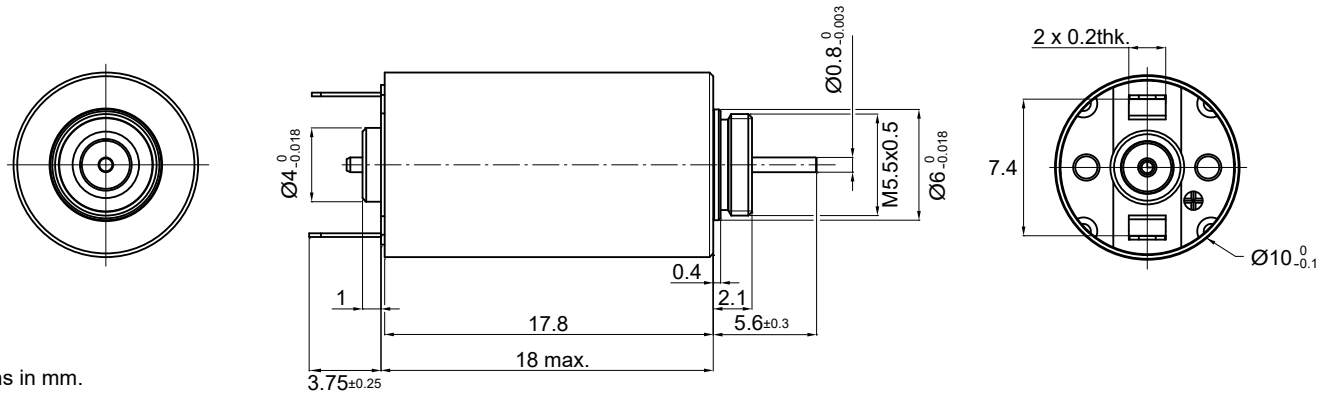

Dimensions in mm.

Electrical Data	Symbol	10NS61 •••• .5 107C	105C	104C	Unit
1 Nominal Voltage	V	3	6	9	Volt
2 No-Load Speed	n_0	10,100	10,400	10,700	rpm
3 No-Load Current	I_0	11.0	4.2	3.6	mA
4 Terminal Resistance	R	10.8	43.0	98.0	Ω
5 Output Power	$P_{2max.}$	0.7	0.7	0.7	W
6 Stall Torque	mNm	0.76 (0.11)	0.75 (0.11)	0.71 (0.1)	mNm (oz-in)
7 Efficiency	$h_{max.}$	64	68	64	%
8 Max Continuous Speed	$n_{e\ max.}$	10,000	10,000	10,000	rpm
9 Max Continuous Torque	$M_{e\ max.}$	0.9 (0.13)	0.9 (0.13)	0.85 (0.13)	mNm (oz-in)
10 Max Continuous Current	$I_{e\ max.}$	0.34	0.17	0.12	A
11 Back-EMF Constant	k_E	0.29	0.57	0.81	mV/rpm
12 Torque Constant	k_M	2.72	5.40	7.70	mNm/A
13 Motor Regulation	R/k^2	1,500.0	1,500.0	1,600.0	10^3/Nms
14 Friction Torque	T_F	0.02 (0.01)	0.02 (0.01)	0.02 (0.01)	mNm (oz-in)
15 Rotor Inductance	L	0.01	0.02	0.03	mH
16 Mechanical Time Constant	τ_m	7.3	7.3	8.1	ms
17 Rotor Inertia	J	0.05	0.05	0.05	g-cm²

General Data			
18 Thermal Resistance (rotor/body)	R_{th1}/R_{th2}	23/48	°C/W
19 Thermal Time Constant (rotor/stator)	t_{W1}/t_{W2}	5/150	S
20 Operating Temperature Range:	motor	-30°C to 85°C (-22°F to 185°F)	°C (°F)
	rotor	100°C (212°F)	°C (°F)
21 Shaft Load Max.:		With sleeve bearings	
(2 mm. from bearing)	-radial	0.5 (1.8)	N (oz)
	-axial	30 (107.9)	N (oz)
22 Shaft Play:	-radial	<0.015 (0.0006)	mm (inch)
	-axial	0.100 (0.0039)	mm (inch)
23 Weight	g	7 (0.25)	g (oz)
24 Commutation Segments	-	9	segments

Execution Table

Gearbox	Single Shaft
R10	3

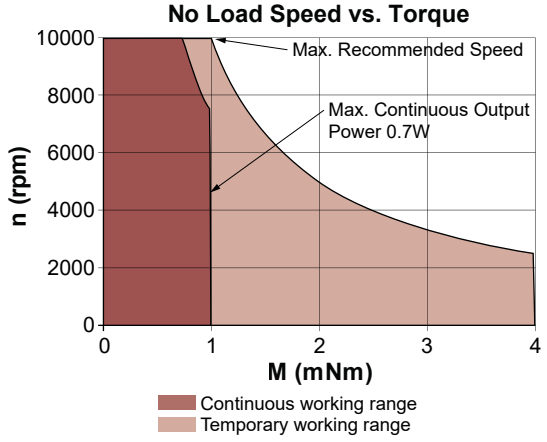

▶ Motor shaft rotates CW when seen from motor front face when +ve and -ve supply is given to respective terminals.

12G88 Athlonix™

Ø 12 mm • Precious metal commutation • 3.5 mNm

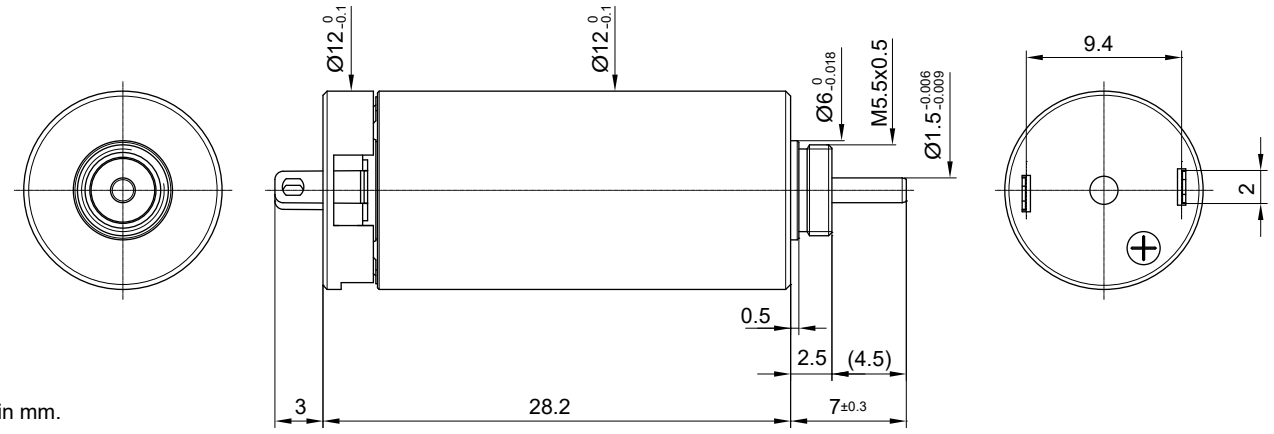

Dimensions in mm.

Electrical Data	Symbol	12G88 •••• .1001 215E	12G88 •••• .1001 210E	Unit
1 Nominal Voltage	V	4.5	9	Volt
2 No-Load Speed	n_0	8,670	9,900	rpm
3 No-Load Current	I_0	16.0	9.0	mA
4 Terminal Resistance	R	3.2	12.3	Ω
5 Output Power	$P_{2max.}$	2.7	2.4	W
6 Stall Torque	mNm	6.8 (0.97)	6.3 (0.9)	mNm (oz-in)
7 Efficiency	$h_{max.}$	80	79	%
8 Max Continuous Speed	$n_{e\ max.}$	10,000	10,000	rpm
9 Max Continuous Torque	$M_{e\ max.}$	3.5 (0.50)	3.1 (0.44)	mNm (oz-in)
10 Max Continuous Current	$I_{e\ max.}$	0.73	0.37	A
11 Back-EMF Constant	k_E	0.51	0.90	mV/rpm
12 Torque Constant	k_M	4.90	8.60	mNm/A
13 Motor Regulation	R/k^2	130.0	170.0	10^3/Nms
14 Friction Torque	T_F	0.08 (0.02)	0.08 (0.02)	mNm (oz-in)
15 Rotor Inductance	L	0.08	0.25	mH
16 Mechanical Time Constant	τ_m	3.8	4.3	ms
17 Rotor Inertia	J	0.29	0.26	g-cm²

General Data			
18 Thermal Resistance (rotor/body)	R_{th1}/R_{th2}	10/50	°C/W
19 Thermal Time Constant (rotor/stator)	t_{W1}/t_{W2}	6/300	S
20 Operating Temperature Range:	motor rotor	-30°C to 85°C (-22°F to 185°F) 100°C (212°F)	°C (°F) °C (°F)
21 Shaft Load Max.: (5 mm. from bearing)	 -radial -axial	With sleeve bearings 1.5 (5.4) 150 (539.5)	 N (oz) N (oz)
22 Shaft Play:	-radial -axial	<0.015 (0.0006) 0.300 (0.012)	mm (inch) mm (inch)
23 Weight	g	15 (0.53)	g (oz)
24 Commutation Segment	-	9	segment

Execution Table

Gearbox	Single Shaft	MR2
R10	1003	1005
R13	1002	1004

No Load Speed vs. Torque

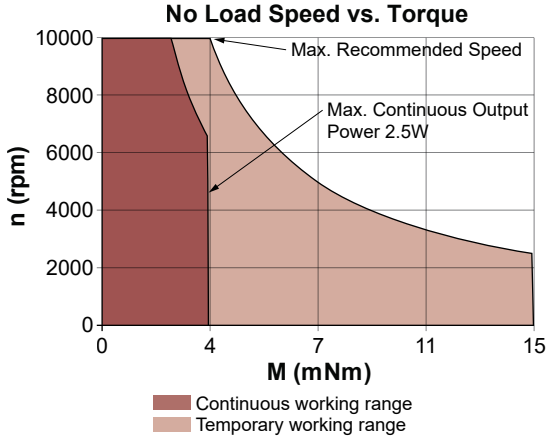

▶ Motor shaft rotates CW when seen from motor front face when +ve and -ve supply is given to respective terminals.

V092020 • © 2020 Portescap. Specifications subject to change without notice.

12GS88 Athlonix™

Ø 12 mm • Precious metal commutation • 1.5 mNm

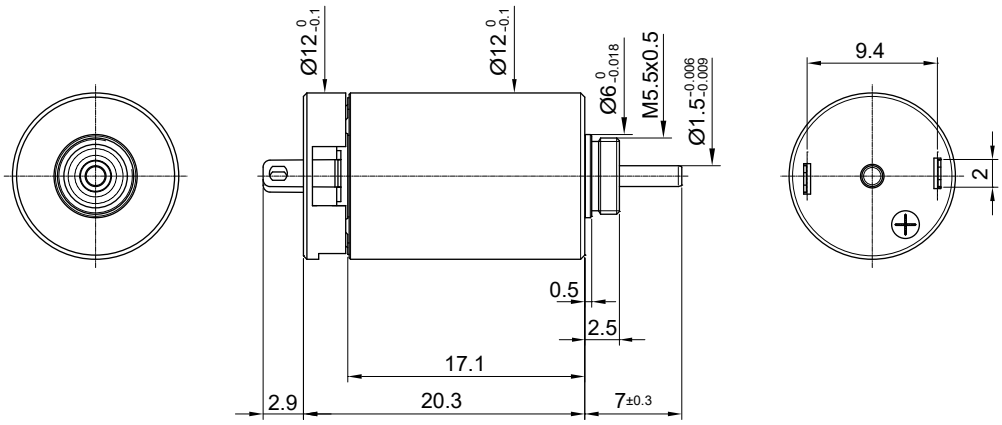

Dimensions in mm.

Electrical Data	Symbol	12GS88 •••• .1007 210E	12GS88 •••• .1007 208F	Unit
1 Nominal Voltage	V	3	6	Volt
2 No-Load Speed	n_0	7,280	9,000	rpm
3 No-Load Current	I_0	14.0	12.0	mA
4 Terminal Resistance	R	7.4	20.6	Ω
5 Output Power	$P_{2max.}$	1.2	1.1	W
6 Stall Torque	mNm	1.54 (0.22)	1.78 (0.26)	mNm (oz-in)
7 Efficiency	$h_{max.}$	66	64	%
8 Max Continuous Speed	$n_{e\ max.}$	10,000	10,000	rpm
9 Max Continuous Torque	$M_{e\ max.}$	1.51 (0.21)	1.45 (0.21)	mNm (oz-in)
10 Max Continuous Current	$I_{e\ max.}$	0.41	0.25	A
11 Back-EMF Constant	k_E	0.40	0.64	mV/rpm
12 Torque Constant	k_M	3.80	6.10	mNm/A
13 Motor Regulation	R/k^2	512.0	550.0	10^3/Nms
14 Friction Torque	T_F	0.07 (0.01)	0.07 (0.01)	mNm (oz-in)
15 Rotor Inductance	L	0.09	0.25	mH
16 Mechanical Time Constant	τ_m	9.7	12.0	ms
17 Rotor Inertia	J	0.19	0.21	g-cm²

General Data			
18 Thermal Resistance (rotor/body)	R_{th1}/R_{th2}	14/66	°C/W
19 Thermal Time Constant (rotor/stator)	t_{W1}/t_{W2}	5/150	S
20 Operating Temperature Range:	motor	-30°C to 85°C (-22°F to 185°F)	°C (°F)
	rotor	100°C (212°F)	°C (°F)
21 Shaft Load Max.:		With sleeve bearings	
(5 mm. from bearing)	-radial	1.5 (5.4)	N (oz)
	-axial	150 (539.5}	N (oz)
22 Shaft Play:	-radial	<0.03 (0.0012)	mm (inch)
	-axial	0.15 (0.0059)	mm (inch)
23 Weight	g	13.5 (0.48)	g (oz)
24 Commutation Segment	-	9	segment

Execution Table

Gearbox	Single Shaft	MR2
R10	Upon Request	Upon Request
R13	Upon Request	Upon Request

No Load Speed vs. Torque

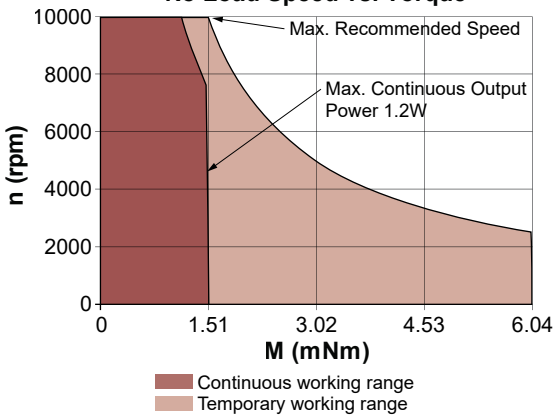

▶ Motor shaft rotates CW when seen from motor front face when +ve and -ve supply is given to respective terminals.

13N88

Ø 13 mm • Precious metal commutation • 3.3 mNm

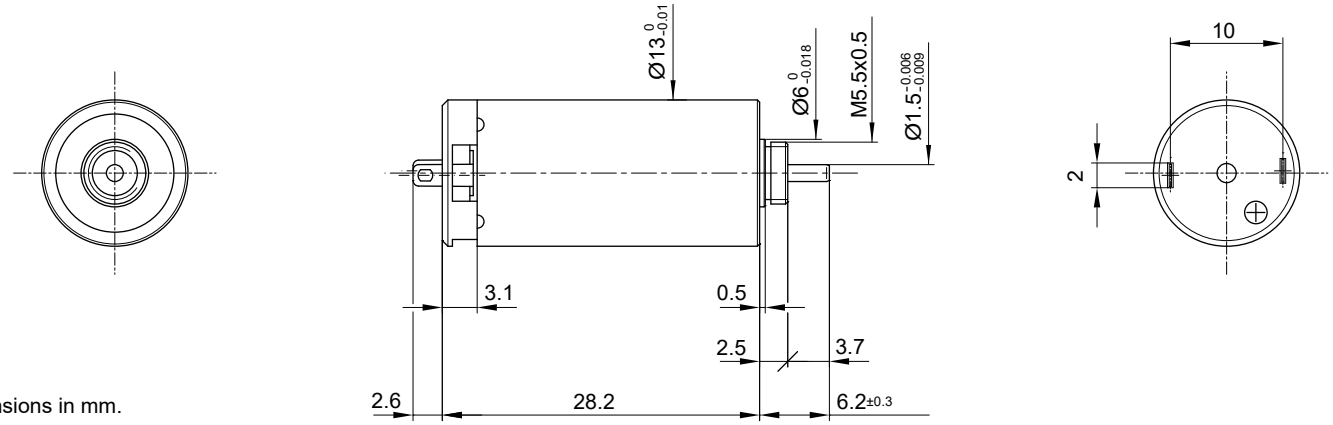

Dimensions in mm.

Electrical Data	Symbol	13N88 •••• .1 213E	13N88 •••• .1 110	13N88 •••• .1 107	Unit
1 Nominal Voltage	V	6	12	24	Volt
2 No-Load Speed	n_0	12,290	12,400	14,150	rpm
3 No-Load Current	I_0	25.6	13.6	8.8	mA
4 Terminal Resistance	R	4.2	13.7	47.4	Ω
5 Output Power	$P_{2max.}$	2.4	2.6	2.5	W
6 Stall Torque	mNm	6.5 (0.93)	8 (1.14)	8.2 (1.17)	mNm (oz-in)
7 Efficiency	$h_{max.}$	75	77	75	%
8 Max Continuous Speed	$n_{e\ max.}$	9,000	9,000	9,000	rpm
9 Max Continuous Torque	$M_{e\ max.}$	3 (0.47)	3.3 (0.47)	3.2 (0.46)	mNm (oz-in)
10 Max Continuous Current	$I_{e\ max.}$	0.69	0.38	0.21	A
11 Back-EMF Constant	k_E	0.48	0.95	1.67	mV/rpm
12 Torque Constant	k_M	4.58	9.10	15.90	mNm/A
13 Motor Regulation	R/k^2	200.0	165.0	185.0	10^3/Nms
14 Friction Torque	T_F	0.12 (0.02)	0.12 (0.02)	0.14 (0.02)	mNm (oz-in)
15 Rotor Inductance	L	0.07	0.25	0.80	mH
16 Mechanical Time Constant	τ_m	5.6	5.5	5.3	ms
17 Rotor Inertia	J	0.28	0.33	0.29	g-cm²

General Data			
18 Thermal Resistance (rotor/body)	R_{th1}/R_{th2}	10/40	°C/W
19 Thermal Time Constant (rotor/stator)	t_{W1}/t_{W2}	6/300	S
20 Operating Temperature Range:	motor	-30°C to 85°C (-22°F to 185°F)	°C (°F)
	rotor	100°C (212°F)	°C (°F)
21 Shaft Load Max.:		With sleeve bearings	
(5 mm. from bearing)	-radial	1.5 (5.4)	N (oz)
	-axial	150 (539.5)	N (oz)
22 Shaft Play:	-radial	<0.03 (0.0012)	mm (inch)
	-axial	0.15 (0.0059)	mm (inch)
23 Weight	g	18 (0.64)	g (oz)
24 Commutation Segment	-	9	segment

Execution Table

Gearbox	Single Shaft	13N88D12	MR2
R13	1	3	Upon Request

No Load Speed vs. Torque

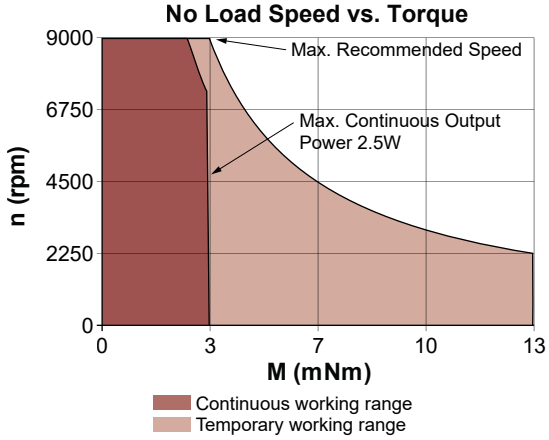

▶ Motor shaft rotates CW when seen from motor front face when +ve and -ve supply is given to respective terminals.

V092020 • © 2020 Portescap. Specifications subject to change without notice.

16C18

Ø 16 mm • Precious metal commutation • 1.12 mNm

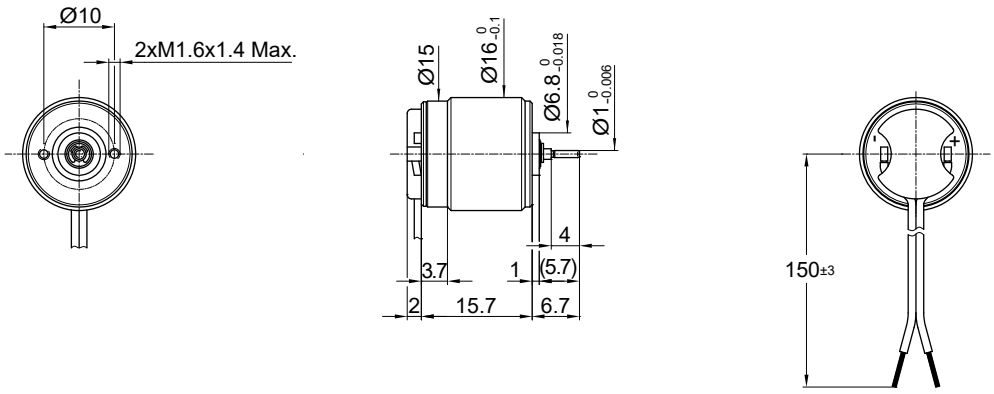

Dimensions in mm.

Electrical Data	Symbol	16C18 •••• .67 115	210	207	205	204	Unit
1 Nominal Voltage	V	1.5	4	6	12	15	Volt
2 No-Load Speed	n_0	15,300	14,700	15,700	16,200	16,000	rpm
3 No-Load Current	I_0	74.8	23.0	18.4	10.4	6.9	mA
4 Terminal Resistance	R	1.2	7.5	18.0	65.0	162.0	Ω
5 Output Power	$P_{2max.}$	0.7	0.8	0.7	0.8	0.7	W
6 Stall Torque	mNm	1.1	1.3	1.1	1.2	0.8	mNm (oz-in)
7 Efficiency	$h_{max.}$	57	63	59	58	53	%
8 Max Continuous Speed	$n_{e\ max.}$	10,000	10,000	10,000	10,000	10,000	rpm
9 Max Continuous Torque	$M_{e\ max.}$	0.98 (0.15)	1.12 (0.15)	1 (0.15)	1 (0.14)	0.79 (0.11)	mNm (oz-in)
10 Max Continuous Current	$I_{e\ max.}$	1.19	0.48	0.31	0.16	0.10	A
11 Back-EMF Constant	k_E	0.09	0.26	0.36	0.70	0.87	mV/rpm
12 Torque Constant	k_M	0.88	2.48	3.44	6.68	8.30	mNm/A
13 Motor Regulation	R/k^2	1555.0	1220.0	1520.0	1460.00	2350.00	10^3/Nms
14 Friction Torque	T_F	0.07 (0.02)	0.06 (0.01)	0.06 (0.01)	0.07 (0.02)	0.06 (0.01)	mNm (oz-in)
15 Rotor Inductance	L	20.00	150.00	250.00	1000.00	1000.00	mH
16 Mechanical Time Constant	τ_m	48.0	50.0	41.0	60.0	63.0	ms
17 Rotor Inertia	J	0.31	0.41	0.27	0.41	0.27	g-cm²

General Data			
18 Thermal Resistance (rotor/body)	R_{th1}/R_{th2}	15/40	°C/W
19 Thermal Time Constant (rotor/stator)	t_{W1}/t_{W2}	4/230	S
20 Operating Temperature Range:	motor	-30°C to 85°C (-22°F to 185°F)	°C (°F)
	rotor	100°C (212°F)	°C (°F)
21 Shaft Load Max.:		With sleeve bearings	
(5 mm. from bearing)	-radial	1.5 (5.4)	N (oz)
	-axial	100 (359.6)	N (oz)
22 Shaft Play:	-radial	<0.03 (0.0012)	mm (inch)
	-axial	0.15 (0.0059)	mm (inch)
23 Weight	g	14 (0.49)	g (oz)
24 Commutation Segment	-	5	segment

Execution Table

Gearbox	Single Shaft	F16
B16	67	76
BA16	67	76
R16	30	76

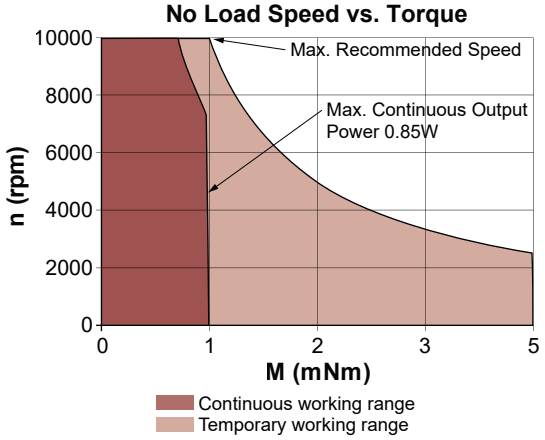

▶ Motor shaft rotates CW when seen from motor front face when +ve and -ve supply is given to respective terminals.

16DCP Athlonix™

Ø 16 mm • Precious metal commutation • 2.63 mNm

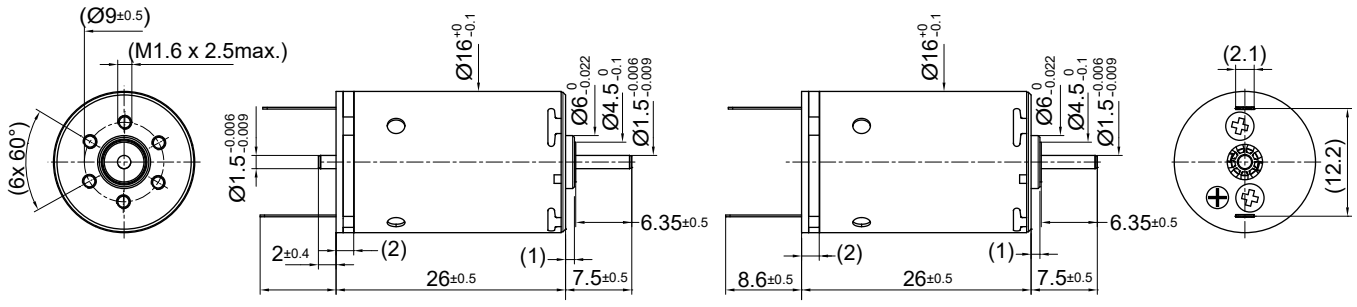

16DCP 26P2 •••• .2 16DCP 26P1 •••• .1

Dimensions in mm.

Electrical Data	Symbol	16DCP 26P1/P2 •••• .* 211P	208P	209E	205P	Unit
1 Nominal Voltage	V	3	6	9	12	Volt
2 No-Load Speed	n_0	7727	8044	7904	7658	rpm
3 No-Load Current	I_0	19.4	10.1	6.6	4.8	mA
4 Terminal Resistance	R	3.3	12.1	30.7	51.4	Ω
5 Output Power	$P_{2max.}$	1.4	1.4	1.3	1.4	W
6 Stall Torque	mNm	3.25 (0.47)	3.4 (0.49)	3.04 (0.44)	3.35 (0.48)	mNm (oz-in)
7 Efficiency	$h_{max.}$	73	74	72	73	%
8 Max Continuous Speed	$n_{e\ max.}$	10000	10000	10000	10000	rpm
9 Max Continuous Torque	$M_{e\ max.}$	2.58 (0.37)	2.59 (0.37)	2.46 (0.35)	2.63 (0.38)	mNm (oz-in)
10 Max Continuous Current	$I_{e\ max.}$	0.73	0.38	0.24	0.18	A
11 Back-EMF Constant	k_E	0.38	0.73	1.11	1.53	mV/rpm
12 Torque Constant	k_M	3.63	6.98	10.63	14.65	mNm/A
13 Motor Regulation	R/k^2	248.57	247.65	272.02	239.14	10^3/Nms
14 Friction Torque	T_F	0.063 (0.009)	0.063 (0.009)	0.063 (0.009)	0.063 (0.009)	mNm (oz-in)
15 Mechanical Time Constant	τ_m	25.64	25.06	28.22	24.90	ms
16 Rotor Inertia	J	1.03	1.01	1.04	1.04	g-cm²

General Data			
17 Thermal Resistance (rotor/body)	R_{th1}/R_{th2}	7/35	°C/W
18 Thermal Time Constant (rotor/stator)	t_{W1}/t_{W2}	6/380	S
19 Operating Temperature Range:	motor rotor	-30°C to 85°C (-22°F to 185°F) 100°C (212°F)	°C (°F) °C (°F)
20 Shaft Load Max.: (5 mm. from bearing)	 -radial -axial	With sleeve bearings 1.5 (5.39) 100 (359.6)	 N (oz) N (oz)
21 Shaft Play:	-radial -axial	0.03 (0.0012) 0.15 (0.0059)	mm (inch) mm (inch)
22 Weight	g	23 (0.82)	g (oz)
23 Commutation Segment	-	9	segment

*Also available with ball bearing

Execution Table

Gearbox	Single Shaft	MR2	M Sense B
R16	1	2	10
B16	3	4	11
BA16	3	4	11

Note:
P1: standard commutation
P2: special commutation for double shaft version

▶ Motor shaft rotates CW when seen from motor front face when +ve and -ve supply is given to respective terminals.

No Load Speed vs. Torque

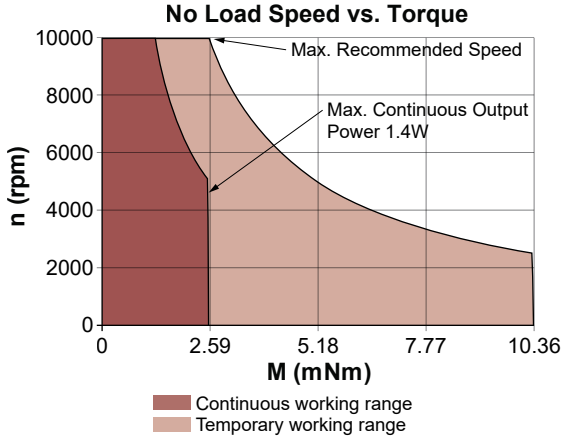

V092020 • © 2020 Portescap. Specifications subject to change without notice.

16DCP Athlonix™

Ø 16 mm • Precious metal commutation • 2.63 mNm

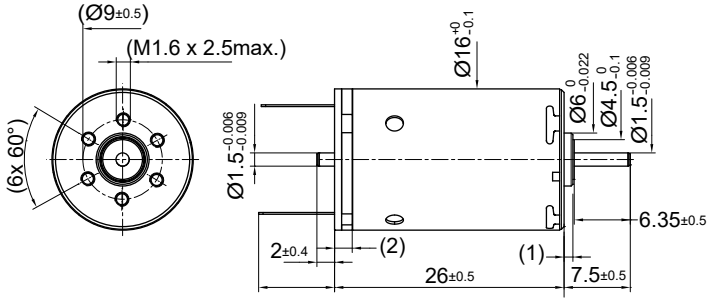

16DCP 26P2 •••• .2

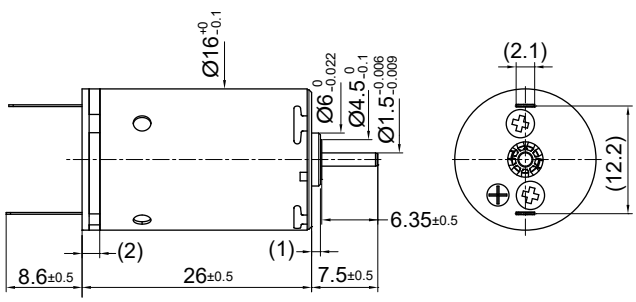

16DCP 26P1 •••• .1

Dimensions in mm.

Electrical Data	Symbol	16DCP 26P1/P2 •••• .* 107P	106P	205E	Unit
1 Nominal Voltage	V	18	21	24	Volt
2 No-Load Speed	n_0	9684	9259	8022	rpm
3 No-Load Current	I_0	4.0	3.3	2.5	mA
4 Terminal Resistance	R	76.0	129.4	208.1	Ω
5 Output Power	$P_{2max.}$	1.4	1.3	1.3	W
6 Stall Torque	mNm	4.06 (0.58)	3.37 (0.48)	3.15 (0.45)	mNm (oz-in)
7 Efficiency	$h_{max.}$	76	73	73	%
8 Max Continuous Speed	$n_{e\ max.}$	10000	10000	10000	rpm
9 Max Continuous Torque	$M_{e\ max.}$	2.57 (0.37)	2.39 (0.34)	2.49 (0.36)	mNm (oz-in)
10 Max Continuous Current	$I_{e\ max.}$	0.15	0.12	0.09	A
11 Back-EMF Constant	k_E	1.83	2.22	2.93	mV/rpm
12 Torque Constant	k_M	17.45	21.21	27.94	mNm/A
13 Motor Regulation	R/k^2	249.78	287.47	266.44	10^3/Nms
14 Friction Torque	T_F	0.063 (0.009)	0.063 (0.009)	0.063 (0.009)	mNm (oz-in)
15 Mechanical Time Constant	τ_m	24.89	24.87	28.14	ms
16 Rotor Inertia	J	1.00	0.87	1.06	g-cm²

General Data			
17 Thermal Resistance (rotor/body)	R_{th1}/R_{th2}	7/35	°C/W
18 Thermal Time Constant (rotor/stator)	t_{W1}/t_{W2}	6/380	S
19 Operating Temperature Range:	motor rotor	-30°C to 85°C (-22°F to 185°F) 100°C (212°F)	°C (°F) °C (°F)
20 Shaft Load Max.: (5 mm. from bearing)	 -radial -axial	With sleeve bearings 1.5 (5.39) 100 (359.6)	 N (oz) N (oz)
21 Shaft Play:	-radial -axial	0.03 (0.0012) 0.15 (0.0059)	mm (inch) mm (inch)
22 Weight	g	23 (0.82)	g (oz)
23 Commutation Segment	-	9	segment

*Also available with ball bearing

Execution Table

Gearbox	Single Shaft	MR2	M Sense B
R16	1	2	10
B16	3	4	11
BA16	3	4	11

Note:
P1: standard commutation
P2: special commutation for double shaft version

▶ Motor shaft rotates CW when seen from motor front face when +ve and -ve supply is given to respective terminals.

No Load Speed vs. Torque

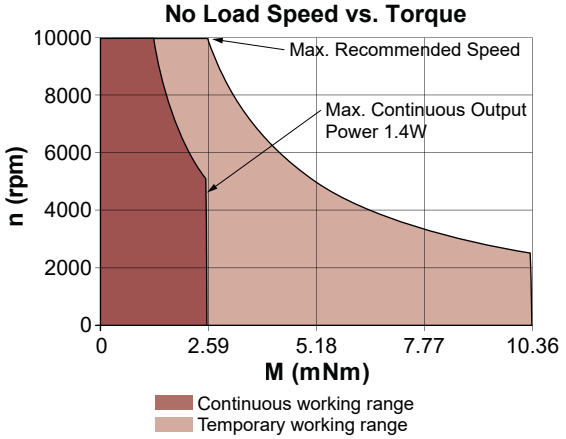

16DCP Athlonix™

Ø 16 mm • Graphite-Copper commutation • 2.42 mNm

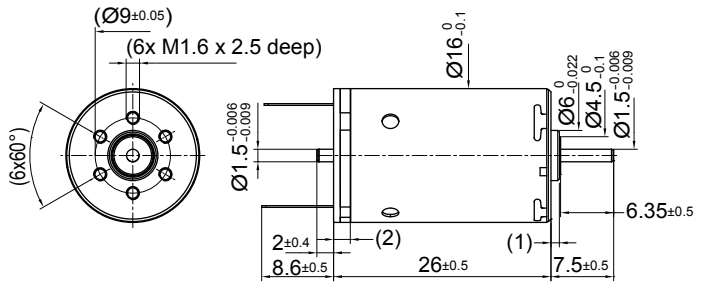

16DCP 26G2 •••• .2

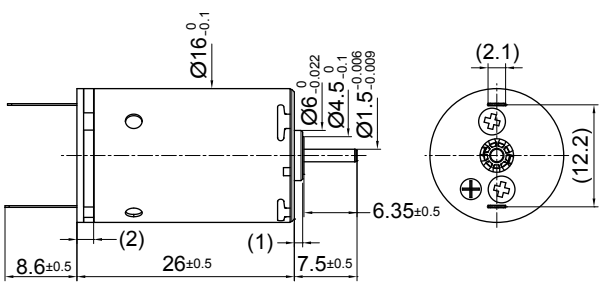

16DCP 26G1 •••• .1

Dimensions in mm.

Electrical Data	Symbol	16DCP 26G1/G2 •••• .* 211P	208P	209E	205P	Unit
1 Nominal Voltage	V	3	6	9	12	Volt
2 No-Load Speed	n_0	7210	7543	7358	7179	rpm
3 No-Load Current	I_0	77.2	40.1	26.3	19.1	mA
4 Terminal Resistance	R	3.4	12.2	30.8	51.5	Ω
5 Output Power	$P_{2max.}$	1.2	1.2	1.2	1.3	W
6 Stall Torque	mNm	2.94 (0.42)	3.16 (0.45)	2.82 (0.4)	3.13 (0.45)	mNm (oz-in)
7 Efficiency	$h_{max.}$	50	51	49	51	%
8 Max Continuous Speed	$n_{e\ max.}$	10000	10000	10000	10000	rpm
9 Max Continuous Torque	$M_{e\ max.}$	2.33 (0.33)	2.36 (0.34)	2.25 (0.32)	2.42 (0.35)	mNm (oz-in)
10 Max Continuous Current	$I_{e\ max.}$	0.72	0.38	0.24	0.18	A
11 Back-EMF Constant	k_E	0.38	0.73	1.11	1.53	mV/rpm
12 Torque Constant	k_M	3.63	6.98	10.63	14.65	mNm/A
13 Motor Regulation	R/k^2	256.16	249.71	272.91	239.61	10^3/Nms
14 Friction Torque	T_F	0.25 (0.035)	0.25 (0.035)	0.25 (0.035)	0.25 (0.035)	mNm (oz-in)
15 Mechanical Time Constant	τ_m	26.42	25.27	28.31	24.95	ms
16 Rotor Inertia	J	1.03	1.01	1.04	1.04	g-cm²

General Data			
17 Thermal Resistance (rotor/body)	R_{th1}/R_{th2}	7/35	°C/W
18 Thermal Time Constant (rotor/stator)	t_{W1}/t_{W2}	6/380	S
19 Operating Temperature Range:	motor	-30°C to 85°C (-22°F to 185°F)	°C (°F)
	rotor	100°C (212°F)	°C (°F)
20 Shaft Load Max.:		With sleeve bearings	
(5 mm. from bearing)	-radial	1.5 (5.39)	N (oz)
	-axial	100 (359.6)	N (oz)
21 Shaft Play:	-radial	0.03 (0.0012)	mm (inch)
	-axial	0.15 (0.0059)	mm (inch)
22 Weight	g	23 (0.82)	g (oz)
23 Commutation Segment	-	9	segment

*Also available with ball bearing

Execution Table

Gearbox	Single Shaft	MR2	M Sense B
R16	1	2	10
B16	3	4	11
BA16	3	4	11

Note:
G1: standard commutation
G2: special commutation for double shaft version

▶ Motor shaft rotates CW when seen from motor front face when +ve and -ve supply is given to respective terminals.

No Load Speed vs. Torque

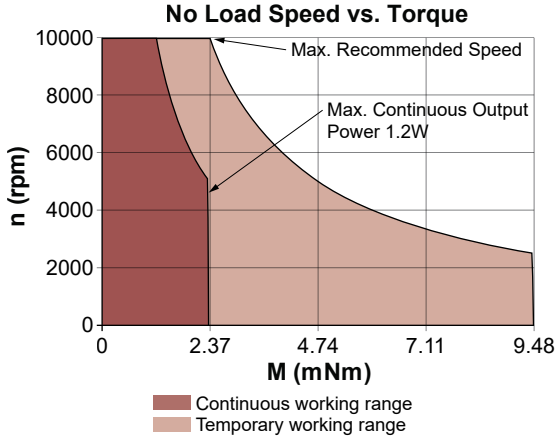

V092020 • © 2020 Portescap. Specifications subject to change without notice.

16DCP Athlonix™

Ø 16 mm • Graphite-Copper commutation • 2.42 mNm

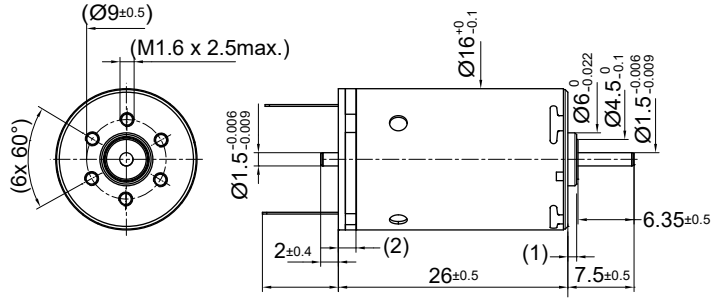

16DCP 26G2 •••• .2

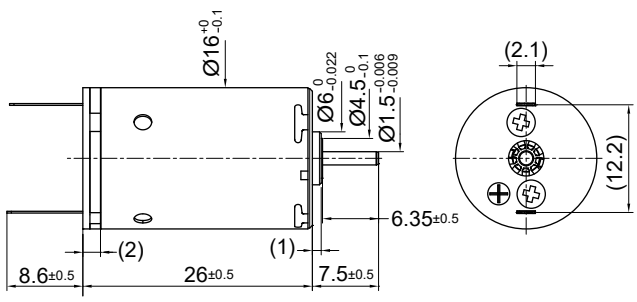

16DCP 26G1 •••• .1

Dimensions in mm.

Electrical Data	Symbol	16DCP 26G1/G2 •••• .* 107P	106P	205E	Unit
1 Nominal Voltage	V	18	21	24	Volt
2 No-Load Speed	n_0	9184	8684	7489	rpm
3 No-Load Current	I_0	16.0	13.2	10.0	mA
4 Terminal Resistance	R	76.1	129.5	208.2	Ω
5 Output Power	$P_{2max.}$	1.2	1.1	1.2	W
6 Stall Torque	mNm	3.84 (0.55)	3.16 (0.45)	2.94 (0.42)	mNm (oz-in)
7 Efficiency	$h_{max.}$	55	51	50	%
8 Max Continuous Speed	$n_{e\ max.}$	10000	10000	10000	rpm
9 Max Continuous Torque	$M_{e\ max.}$	2.36 (0.34)	2.18 (0.31)	2.28 (0.33)	mNm (oz-in)
10 Max Continuous Current	$I_{e\ max.}$	0.15	0.12	0.09	A
11 Back-EMF Constant	k_E	1.83	2.22	2.93	mV/rpm
12 Torque Constant	k_M	17.45	21.21	27.94	mNm/A
13 Motor Regulation	R/k^2	250.11	287.70	266.57	10^3/Nms
14 Friction Torque	T_F	0.25 (0.035)	0.25 (0.035)	0.25 (0.035)	mNm (oz-in)
15 Mechanical Time Constant	τ_m	24.92	24.89	28.15	ms
16 Rotor Inertia	J	1.00	0.87	1.06	g-cm²

General Data			
17 Thermal Resistance (rotor/body)	R_{th1}/R_{th2}	7/35	°C/W
18 Thermal Time Constant (rotor/stator)	t_{W1}/t_{W2}	6/380	S
19 Operating Temperature Range:	motor rotor	-30°C to 85°C (-22°F to 185°F) 100°C (212°F)	°C (°F) °C (°F)
20 Shaft Load Max.: (5 mm. from bearing)	 -radial -axial	With sleeve bearings 1.5 (5.39) 100 (359.6)	 N (oz) N (oz)
21 Shaft Play:	-radial -axial	0.03 (0.0012) 0.15 (0.0059)	mm (inch) mm (inch)
22 Weight	g	23 (0.82)	g (oz)
23 Commutation Segment	-	9	segment

*Also available with ball bearing

Execution Table

Gearbox	Single Shaft	MR2	M Sense B
R16	1	2	10
B16	3	4	11
BA16	3	4	11

Note:
G1: standard commutation
G2: special commutation for double shaft version

▶ Motor shaft rotates CW when seen from motor front face when +ve and -ve supply is given to respective terminals.

No Load Speed vs. Torque

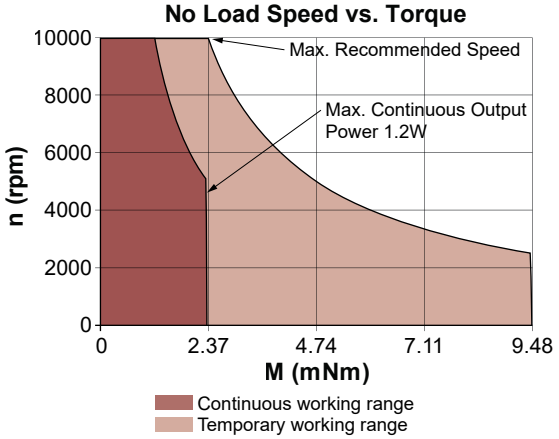

16DCT Athlonix™

Ø 16 mm • Precious metal commutation • 5.45 mNm

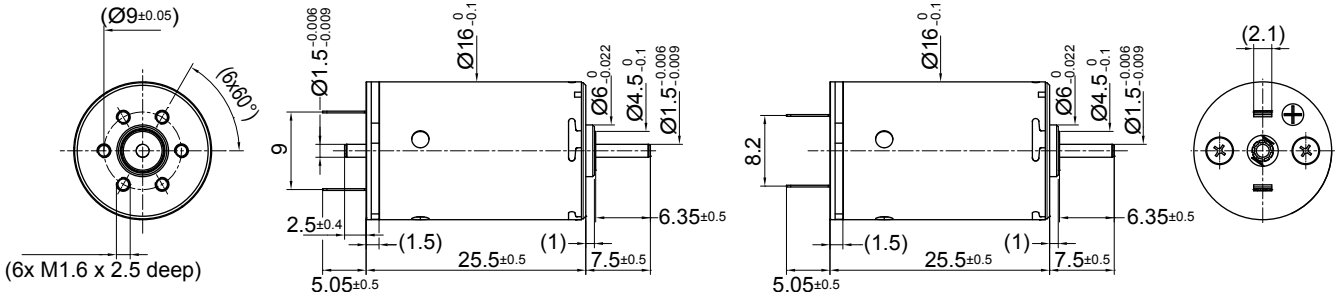

16DCT 26P2 •••• .2

16DCT 26P1 •••• .1

Dimensions in mm.

Electrical Data	Symbol	16DCT 26P1/P2 •••• .* 219P	219E	213E	211E	207P	Unit
1 Nominal Voltage	V	3	6	9	12	15	Volt
2 No-Load Speed	n_0	8081	8600	7970	7968	8599	rpm
3 No-Load Current	I_0	28.6	15.2	9.4	7.1	6.1	mA
4 Terminal Resistance	R	0.7	2.3	7.5	13.8	18.6	Ω
5 Output Power	$P_{2max.}$	4.2	4.2	4.2	4.1	4.1	W
6 Stall Torque	mNm	16.12 (2.29)	17.13 (2.43)	12.77 (1.81)	12.33 (1.75)	13.21 (1.88)	mNm (oz-in)
7 Efficiency	$h_{max.}$	85	85	83	83	83	%
8 Max Continuous Speed	$n_{e\ max.}$	10000	10000	10000	10000	10000	rpm
9 Max Continuous Torque	$M_{e\ max.}$	5.28 (0.75)	5.27 (0.75)	5.36 (0.76)	5.27 (0.75)	5.25 (0.75)	mNm (oz-in)
10 Max Continuous Current	$I_{e\ max.}$	1.53	0.81	0.51	0.38	0.32	A
11 Back-EMF Constant	k_E	0.37	0.69	1.12	1.49	1.73	mV/rpm
12 Torque Constant	k_M	3.52	6.62	10.70	14.27	16.53	mNm/A
13 Motor Regulation	R/k^2	52.47	52.55	65.35	67.66	68.15	10^3/Nms
14 Friction Torque	T_F	0.08 (0.011)	0.08 (0.011)	0.08 (0.011)	0.08 (0.011)	0.08 (0.011)	mNm (oz-in)
15 Mechanical Time Constant	τ_m	7.79	7.80	7.56	7.51	6.63	ms
16 Rotor Inertia	J	1.48	1.48	1.16	1.11	0.97	g-cm²

General Data			
17 Thermal Resistance (rotor/body)	R_{th1}/R_{th2}	7/35	°C/W
18 Thermal Time Constant (rotor/stator)	t_{W1}/t_{W2}	6/380	S
19 Operating Temperature Range:	motor	-30°C to 85°C (-22°F to 185°F)	°C (°F)
	rotor	100°C (212°F)	°C (°F)
20 Shaft Load Max.:		With sleeve bearings	
(5 mm. from bearing)	-radial	1.5 (5.39)	N (oz)
	-axial	100 (359.6)	N (oz)
21 Shaft Play:	-radial	0.03 (0.0012)	mm (inch)
	-axial	0.15 (0.0059)	mm (inch)
22 Weight	g	23 (0.82)	g (oz)
23 Commutation Segment	-	9	segment

*Also available with ball bearing

Execution Table

Gearbox	Single Shaft	MR2	M Sense B
R16	1	2	10
B16	3	4	11
BA16	3	4	11

Note:
P1: standard commutation
P2: special commutation for double shaft version
*Special Ball bearing system available for high radial load requirements

▶ Motor shaft rotates CW when seen from motor front face when +ve and -ve supply is given to respective terminals.

No Load Speed vs. Torque

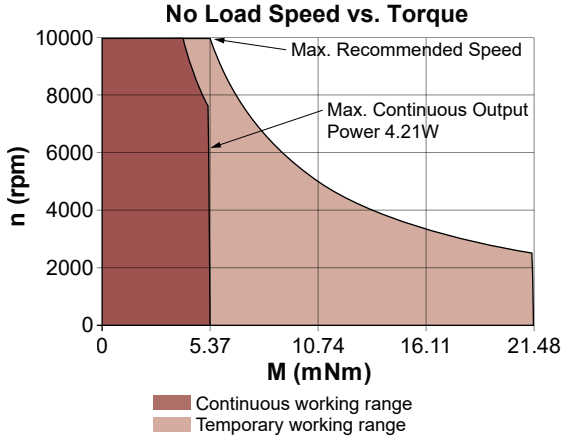

V092020 • © 2020 Portescap. Specifications subject to change without notice.

16DCT Athlonix™

Ø 16 mm • Precious metal commutation • 5.45 mNm

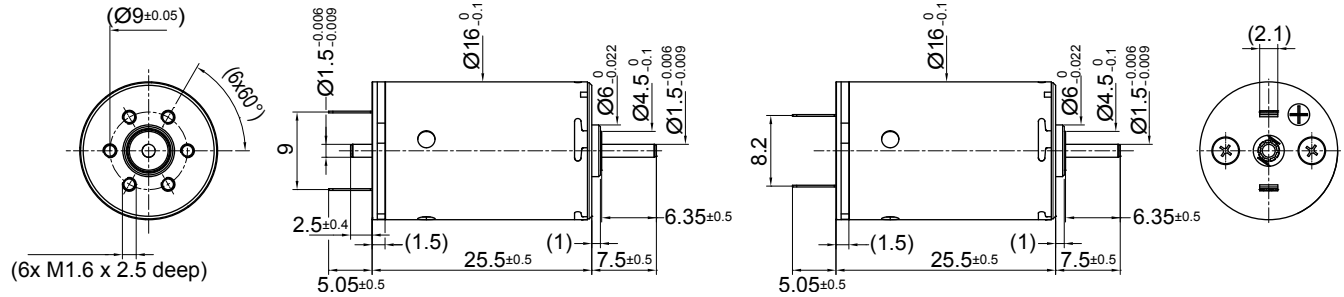

16DCT 26P2 •••• .2

16DCT 26P1 •••• .1

Dimensions in mm.

Electrical Data	Symbol	16DCT 26P1/P2 •••• .* 209E	205P	207E	205E	Unit
1 Nominal Voltage	V	18	24	36	48	Volt
2 No-Load Speed	n_0	8261	7993	10079	8380	rpm
3 No-Load Current	I_0	4.9	3.5	3.0	1.9	mA
4 Terminal Resistance	R	30.7	51.4	80.9	208.1	Ω
5 Output Power	$P_{2max.}$	4.0	4.3	4.1	4.1	W
6 Stall Torque	mNm	11.99 (1.7)	13.2 (1.87)	14.97 (2.13)	12.41 (1.76)	mNm (oz-in)
7 Efficiency	$h_{max.}$	83	83	84	83	%
8 Max Continuous Speed	$n_{e\ max.}$	10000	10000	10000	10000	rpm
9 Max Continuous Torque	$M_{e\ max.}$	5.1 (0.73)	5.45 (0.78)	5.16 (0.74)	5.15 (0.73)	mNm (oz-in)
10 Max Continuous Current	$I_{e\ max.}$	0.25	0.19	0.16	0.10	A
11 Back-EMF Constant	k_E	2.16	2.98	3.55	5.68	mV/rpm
12 Torque Constant	k_M	20.63	28.46	33.88	54.26	mNm/A
13 Motor Regulation	R/k^2	72.15	63.00	70.46	70.67	10^3/Nms
14 Friction Torque	T_F	0.08 (0.011)	0.08 (0.011)	0.08 (0.011)	0.08 (0.011)	mNm (oz-in)
15 Mechanical Time Constant	τ_m	7.48	6.60	7.47	7.46	ms
16 Rotor Inertia	J	1.04	1.04	1.06	1.06	g-cm²

General Data			
17 Thermal Resistance (rotor/body)	R_{th1}/R_{th2}	7/35	°C/W
18 Thermal Time Constant (rotor/stator)	t_{W1}/t_{W2}	6/380	S
19 Operating Temperature Range:	motor	-30°C to 85°C (-22°F to 185°F)	°C (°F)
	rotor	100°C (212°F)	°C (°F)
20 Shaft Load Max.:		With sleeve bearings	
(5 mm. from bearing)	-radial	1.5 (5.39)	N (oz)
	-axial	100 (359.6)	N (oz)
21 Shaft Play:	-radial	0.03 (0.0012)	mm (inch)
	-axial	0.15 (0.0059)	mm (inch)
22 Weight	g	23 (0.82)	g (oz)
23 Commutation Segment	-	9	segment

*Also available with ball bearing

Execution Table

Gearbox	Single Shaft	MR2	M Sense B
R16	1	2	10
B16	3	4	11
BA16	3	4	11

Note:
P1: standard commutation
P2: special commutation for double shaft version
*Special Ball bearing system available for high radial load requirements

▶ Motor shaft rotates CW when seen from motor front face when +ve and -ve supply is given to respective terminals.

No Load Speed vs. Torque

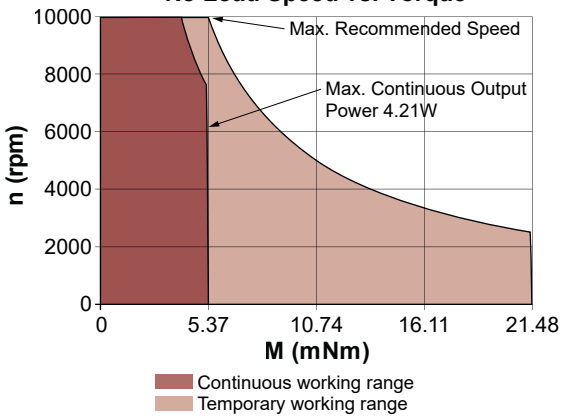

16DCT Athlonix™

Ø 16 mm • Graphite-Copper commutation • 5.06 mNm

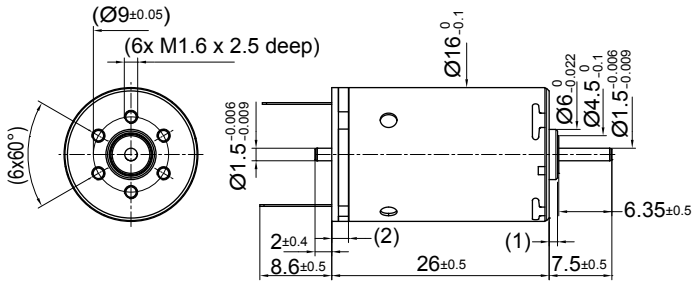

16DCT 26G2 •••• .2

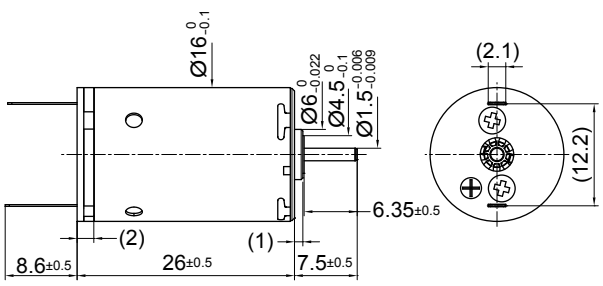

16DCT 26G1 •••• .1

Dimensions in mm.

Electrical Data	Symbol	16DCT 26G1/G2 •••• .*					Unit
		220P	213P	215E	213E	211E	
1 Nominal Voltage	V	3	6	9	12	15	Volt
2 No-Load Speed	n_0	9311	9798	9648	10427	9749	rpm
3 No-Load Current	I_0	150.3	78.7	51.7	41.9	31.4	mA
4 Terminal Resistance	R	0.6	2.0	4.8	7.6	13.9	Ω
5 Output Power	$P_{2max.}$	3.3	3.5	4.0	3.9	3.9	W
6 Stall Torque	mNm	13.95 (1.98)	16.24 (2.3)	15.7 (2.23)	16.48 (2.34)	14.98 (2.13)	mNm (oz-in)
7 Efficiency	$h_{max.}$	68	70	69	70	69	%
8 Max Continuous Speed	$n_{e\ max.}$	10000	10000	10000	10000	10000	rpm
9 Max Continuous Torque	$M_{e\ max.}$	4.21 (0.6)	4.45 (0.64)	5.06 (0.72)	4.98 (0.71)	4.9 (0.7)	mNm (oz-in)
10 Max Continuous Current	$I_{e\ max.}$	1.56	0.86	0.64	0.51	0.38	A
11 Back-EMF Constant	k_E	0.31	0.60	0.91	1.12	1.49	mV/rpm
12 Torque Constant	k_M	2.98	5.69	8.66	10.70	14.27	mNm/A
13 Motor Regulation	R/k^2	69.88	63.14	64.34	66.22	68.15	10^3/Nms
14 Friction Torque	T_F	0.3 (0.042)	0.3 (0.042)	0.3 (0.042)	0.3 (0.042)	0.3 (0.042)	mNm (oz-in)
15 Mechanical Time Constant	τ_m	9.72	7.31	7.78	7.66	7.57	ms
16 Rotor Inertia	J	1.39	1.16	1.21	1.16	1.11	g-cm²

General Data			
17 Thermal Resistance (rotor/body)	R_{th1}/R_{th2}	7/35	°C/W
18 Thermal Time Constant (rotor/stator)	t_{W1}/t_{W2}	6/380	S
19 Operating Temperature Range:	motor	-30°C to 85°C (-22°F to 185°F)	°C (°F)
	rotor	100°C (212°F)	°C (°F)
20 Shaft Load Max.:		With sleeve bearings	
(5 mm. from bearing)	-radial	1.5 (5.39)	N (oz)
	-axial	100 (359.6)	N (oz)
21 Shaft Play:	-radial	0.03 (0.0012)	mm (inch)
	-axial	0.15 (0.0059)	mm (inch)
22 Weight	g	23 (0.82)	g (oz)
23 Commutation Segment	-	9	segment

*Also available with ball bearing

Execution Table

Gearbox	Single Shaft	MR2	M Sense B
R16	1	2	10
B16	3	4	11
BA16	3	4	11

Note:
G1: standard commutation
G2: special commutation for double shaft version
*Special Ball bearing system available for high radial load requirements

▶ Motor shaft rotates CW when seen from motor front face when +ve and -ve supply is given to respective terminals.

No Load Speed vs. Torque

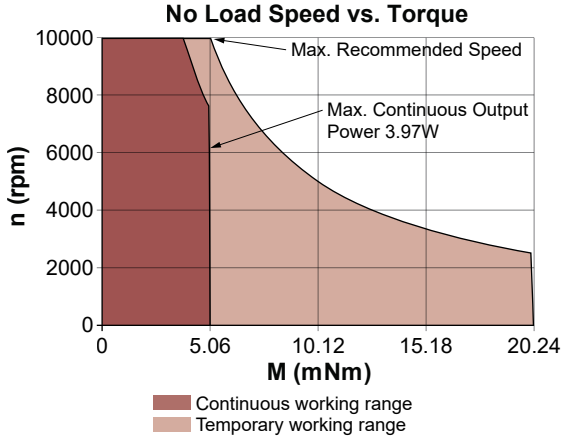

V092020 • © 2020 Portescap. Specifications subject to change without notice.

16DCT Athlonix™

Ø 16 mm • Graphite-Copper commutation • 5.06 mNm

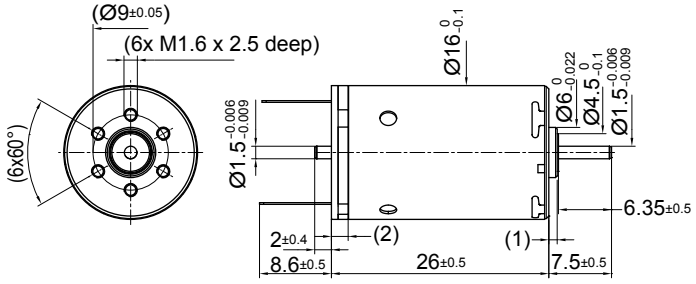

16DCT 26G2 •••• .2

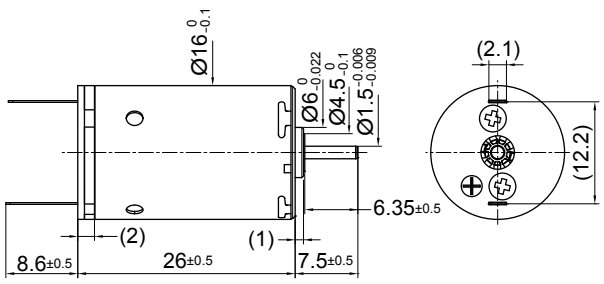

16DCT 26G1 •••• .1

Dimensions in mm.

Electrical Data	Symbol	16DCT 26G1/G2 •••• .* 207P	209F	207E	205E	Unit
1 Nominal Voltage	V	18	24	36	48	Volt
2 No-Load Speed	n_0	10105	10053	9845	8145	rpm
3 No-Load Current	I_0	27.1	20.2	13.2	8.3	mA
4 Terminal Resistance	R	18.7	33.1	81.0	208.2	Ω
5 Output Power	$P_{2max.}$	3.8	3.9	3.8	3.8	W
6 Stall Torque	mNm	15.44 (2.19)	15.62 (2.22)	14.61 (2.07)	12.06 (1.71)	mNm (oz-in)
7 Efficiency	$h_{max.}$	69	69	68	66	%
8 Max Continuous Speed	$n_{e\,max.}$	10000	10000	10000	10000	rpm
9 Max Continuous Torque	$M_{e\,max.}$	4.89 (0.7)	4.93 (0.7)	4.81 (0.69)	4.8 (0.68)	mNm (oz-in)
10 Max Continuous Current	$I_{e\,max.}$	0.32	0.24	0.16	0.10	A
11 Back-EMF Constant	k_E	1.73	2.32	3.55	5.68	mV/rpm
12 Torque Constant	k_M	16.53	22.16	33.88	54.26	mNm/A
13 Motor Regulation	R/k^2	69.00	67.36	70.55	70.70	10^3/Nms
14 Friction Torque	T_F	0.3 (0.042)	0.3 (0.042)	0.3 (0.042)	0.3 (0.042)	mNm (oz-in)
15 Mechanical Time Constant	τ_m	6.66	7.51	7.48	7.47	ms
16 Rotor Inertia	J	0.97	1.11	1.06	1.06	g-cm²

General Data			
17 Thermal Resistance (rotor/body)	R_{th1}/R_{th2}	7/35	°C/W
18 Thermal Time Constant (rotor/stator)	t_{W1}/t_{W2}	6/380	S
19 Operating Temperature Range:	motor rotor	-30°C to 85°C (-22°F to 185°F) 100°C (212°F)	°C (°F) °C (°F)
20 Shaft Load Max.: (5 mm. from bearing)	 -radial -axial	With sleeve bearings 1.5 (5.39) 100 (359.6)	 N (oz) N (oz)
21 Shaft Play:	-radial -axial	0.03 (0.0012) 0.15 (0.0059)	mm (inch) mm (inch)
22 Weight	g	23 (0.82)	g (oz)
23 Commutation Segment	-	9	segment

*Also available with ball bearing

Execution Table

Gearbox	Single Shaft	MR2	M Sense B
R16	1	2	10
B16	3	4	11
BA16	3	4	11

Note:
G1: standard commutation
G2: special commutation for double shaft version
*Special Ball bearing system available for high radial load requirements

▶ Motor shaft rotates CW when seen from motor front face when +ve and -ve supply is given to respective terminals.

No Load Speed vs. Torque

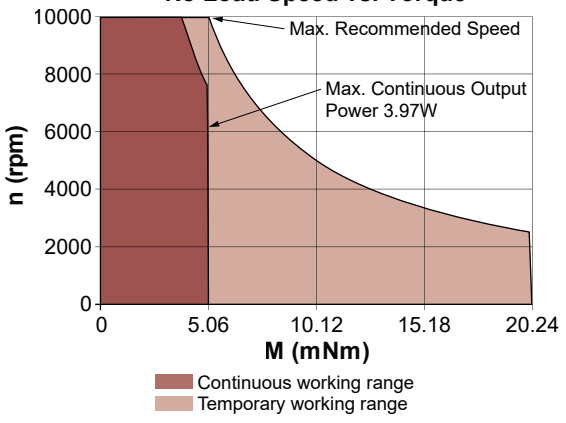

16G88

Ø 16 mm • Precious metal commutation • 5.8 mNm

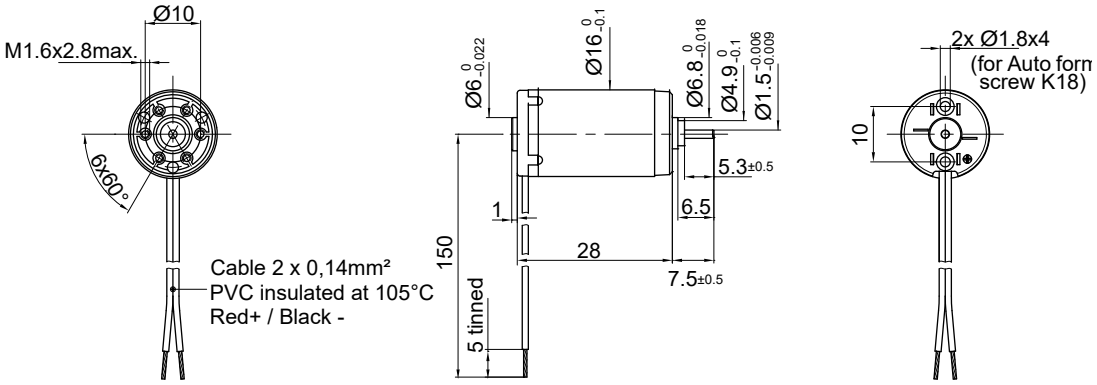

Dimensions in mm.

Electrical Data		Symbol	16G88 •••• .1 220P	214E	213E	211E	210E	205E	Unit
1	Nominal Voltage	V	3	8	9	12	15	32	Volt
2	No-Load Speed	n_0	11,025	9,250	7,980	8,690	9,000	8,150	rpm
3	No-Load Current	I_0	45.0	10.0	8.0	6.5	5.5	2.0	mA
4	Terminal Resistance	R	0.5	5.4	7.6	13.0	19.5	135.0	Ω
5	Output Power	$P_{2max.}$	4.1	4.2	4.6	4.2	4.2	2.5	W
6	Stall Torque	mNm	16 (2.27)	12.1 (1.72)	12.7 (1.8)	12.1 (1.72)	12.2 (1.73)	8.8 (1.25)	mNm (oz-in)
7	Efficiency	$h_{max.}$	83	84	84	84	84	82	%
8	Max Continuous Speed	$n_{e\ max.}$	10,000	10,000	10,000	10,000	10,000	10,000	rpm
9	Max Continuous Torque	$M_{e\ max.}$	5.5 (0.76)	5.3 (0.76)	5.8 (0.83)	5.4 (0.77)	5.4 (0.77)	4.8 (0.68)	mNm (oz-in)
10	Max Continuous Current	$I_{e\ max.}$	2.20	0.66	0.55	0.42	0.35	0.13	A
11	Back-EMF Constant	k_E	0.27	0.86	1.12	1.37	1.65	3.90	mV/rpm
12	Torque Constant	k_M	2.58	8.20	10.70	13.10	15.80	37.20	mNm/A
13	Motor Regulation	R/k^2	75.1	80.3	66.4	75.75	78.11	97.55	10^3/Nms
14	Friction Torque	T_F	0.12 (0.02)	0.08 (0.02)	0.09 (0.02)	0.09 (0.02)	0.09 (0.02)	0.07 (0.01)	mNm (oz-in)
15	Rotor Inductance	L	0.01	0.12	0.15	0.26	0.40	1.70	mH
16	Mechanical Time Constant	τ_m	6.0	6.4	5.3	6.1	5.8	7.8	ms
17	Rotor Inertia	J	0.80	0.80	0.80	0.80	0.74	0.80	g-cm²

General Data				
18	Thermal Resistance (rotor/body)	R_{th1}/R_{th2}	8/35	°C/W
19	Thermal Time Constant (rotor/stator)	t_{W1}/t_{W2}	6/500	S
20	Operating Temperature Range:	motor rotor	-30°C to 85°C (-22°F to 185°F) 100°C (212°F)	°C (°F) °C (°F)
21	Shaft Load Max.: (5 mm. from bearing)	 -radial -axial	With sleeve bearings 1.5 (5.4) 100 (359.6)	 N (oz) N (oz)
22	Shaft Play:	-radial -axial	<0.03 (0.0012) 0.15 (0.0059)	mm (inch) mm (inch)
23	Weight	g	24 (0.85)	g (oz)
24	Commutation Segment	-	9	segment

Execution Table

Gearbox	Single Shaft	MR2
B16	5	Upon Request
BA16	5	Upon Request
R16	1	Upon Request

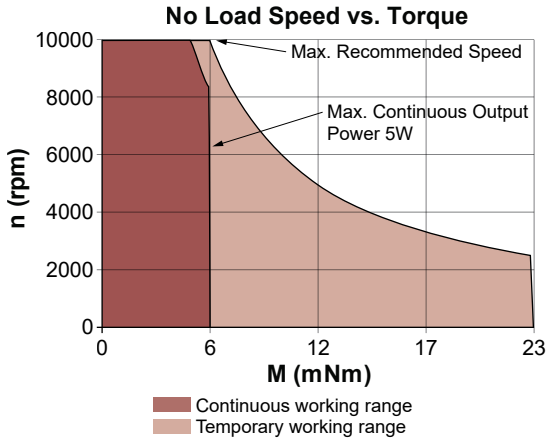

▶ Motor shaft rotates CW when seen from motor front face when +ve and -ve supply is given to respective terminals.

V092020 • © 2020 Portescap. Specifications subject to change without notice.

16N78 Athlonix™

Ø 16 mm • Precious metal commutation • 6.9 mNm

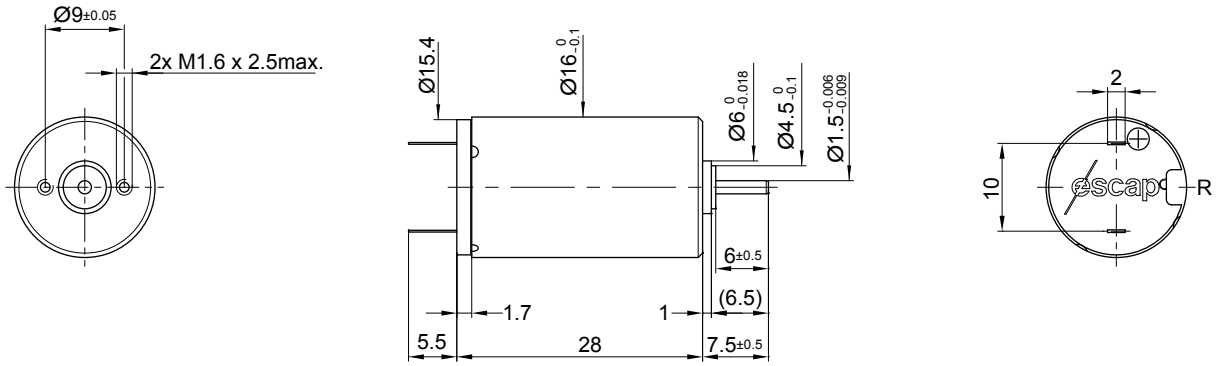

Dimensions in mm.

Electrical Data	Symbol	16N78 •••• .1001						Unit
		135	212P	214E	212E	210E	208E	
1 Nominal Voltage	V	1.5	6	9	12	18	24	Volt
2 No-Load Speed	n_0	7,894	8,350	8,275	8,380	8,530	8,200	rpm
3 No-Load Current	I_0	90.0	18.0	10.0	5.0	5.0	4.0	mA
4 Terminal Resistance	R	0.2	3.0	7.5	13.2	27.5	60.5	Ω
5 Output Power	$P_{2max.}$	4.7	5.4	5.2	5.2	4.9	4.9	W
6 Stall Torque	mNm	13.5 (1.91)	13.6 (1.93)	12.4 (1.76)	12.4 (1.76)	13.1 (1.86)	11 (1.56)	mNm (oz-in)
7 Efficiency	$h_{max.}$	83	82	83	86	83	81	%
8 Max Continuous Speed	$n_{e\ max.}$	10,000	10,000	10,000	10,000	10,000	10,000	rpm
9 Max Continuous Torque	$M_{e\ max.}$	6 (0.98)	6.9 (0.98)	6.6 (0.94)	6.6 (0.94)	6.2 (0.88)	6.3 (0.9)	mNm (oz-in)
10 Max Continuous Current	$I_{e\ max.}$	3.41	1.03	0.65	0.49	0.34	0.23	A
11 Back-EMF Constant	k_E	0.19	0.71	1.08	1.42	2.09	2.90	mV/rpm
12 Torque Constant	k_M	1.80	6.80	10.30	13.60	20.00	27.70	mNm/A
13 Motor Regulation	R/k^2	62.0	64.9	70.7	71.37	69.0	78.85	10^3/Nms
14 Friction Torque	T_F	0.09 (0.02)	0.12 (0.02)	0.1 (0.02)	0.07 (0.01)	0.09 (0.02)	0.08 (0.02)	mNm (oz-in)
15 Rotor Inductance	L	0.01	0.10	0.30	0.50	1.00	2.40	mH
16 Mechanical Time Constant	τ_m	6.8	6.8	8.8	8.6	8.3	9.3	ms
17 Rotor Inertia	J	1.10	1.05	1.25	1.20	1.20	1.18	g-cm²

General Data			
18 Thermal Resistance (rotor/body)	R_{th1}/R_{th2}	6/25	°C/W
19 Thermal Time Constant (rotor/stator)	t_{W1}/t_{W2}	12/250	S
20 Operating Temperature Range:	motor rotor	-30°C to 85°C (-22°F to 185°F) 100°C (212°F)	°C (°F) °C (°F)
21 Shaft Load Max.: (5 mm. from bearing)	 -radial -axial	With sleeve bearings 1.5 (5.4) 100 (359.6)	 N (oz) N (oz)
22 Shaft Play:	-radial -axial	<0.03 (0.0012) 0.15 (0.0059)	mm (inch) mm (inch)
23 Weight	g	24 (0.85)	g (oz)
24 Commutation Segment	-	9	segment

Execution Table

Gearbox	Single Shaft	MR2
B16	1005	1008
BA16	1005	1008
R16	1001	1007

No Load Speed vs. Torque

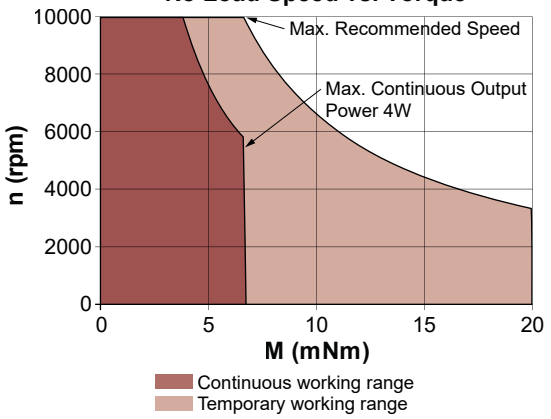

▶ Motor shaft rotates CW when seen from motor front face when +ve and -ve supply is given to respective terminals.

16S78 Athlonix™

Ø 16 mm • Precious metal commutation • 2.8 mNm

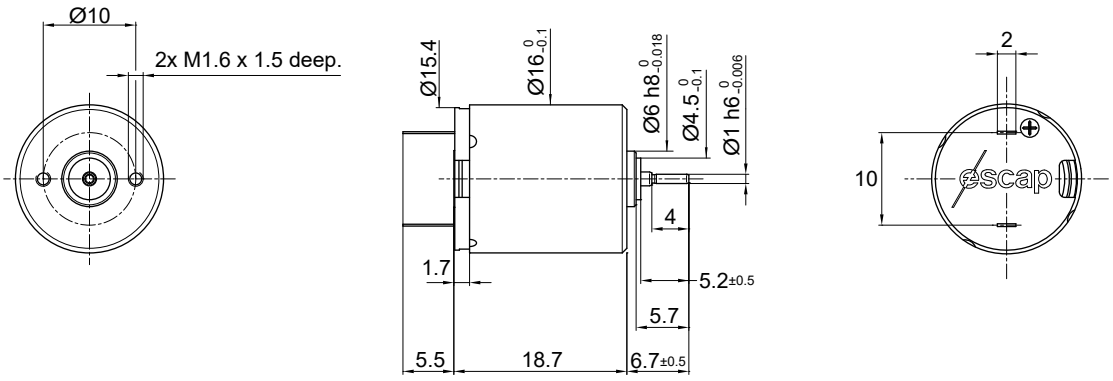

Dimensions in mm.

Electrical Data	Symbol	16S78 •••• .1 208P	16S78 •••• .1 210E	Unit
1 Nominal Voltage	V	6	7.5	Volt
2 No-Load Speed	n_0	10,280	10,865	rpm
3 No-Load Current	I_0	25.0	18.0	mA
4 Terminal Resistance	R	7.5	12.2	Ω
5 Output Power	$P_{2max.}$	1.7	1.6	W
6 Stall Torque	mNm	4.3	3.9	mNm (oz-in)
7 Efficiency	$h_{max.}$	68	69	%
8 Max Continuous Speed	$n_{e\ max.}$	10,000	10,000	rpm
9 Max Continuous Torque	$M_{e\ max.}$	2.6 (0.34)	2.4 (0.34)	mNm (oz-in)
10 Max Continuous Current	$I_{e\ max.}$	0.50	0.38	A
11 Back-EMF Constant	k_E	0.57	0.67	mV/rpm
12 Torque Constant	k_M	5.40	6.40	mNm/A
13 Motor Regulation	R/k^2	255.0	300.0	10^3/Nms
14 Friction Torque	T_F	0.12 (0.02)	0.12 (0.02)	mNm (oz-in)
15 Rotor Inductance	L	0.15	0.23	mH
16 Mechanical Time Constant	τ_m	12.8	15.0	ms
17 Rotor Inertia	J	0.50	0.50	g-cm²
General Data				
18 Thermal Resistance (rotor/body)	R_{th1}/R_{th2}	13/38		°C/W
19 Thermal Time Constant (rotor/stator)	t_{W1}/t_{W2}	7/400		S
20 Operating Temperature Range:	motor rotor	-30°C to 85°C (-22°F to 185°F) 100°C (212°F)		°C (°F) °C (°F)
21 Shaft Load Max.: (5 mm. from bearing)	 -radial -axial	With sleeve bearings 1.5 (5.4) 100 (359.6)		 N (oz) N (oz)
22 Shaft Play:	-radial -axial	<0.03 (0.0012) 0.15 (0.0059)		mm (inch) mm (inch)
23 Weight	g	19 (0.68)		g (oz)
24 Commutation Segment	-	9		segment

Execution Table

Gearbox	Single Shaft	MR2
B16	2	3
BA16	2	3
R16	2	3

No Load Speed vs. Torque

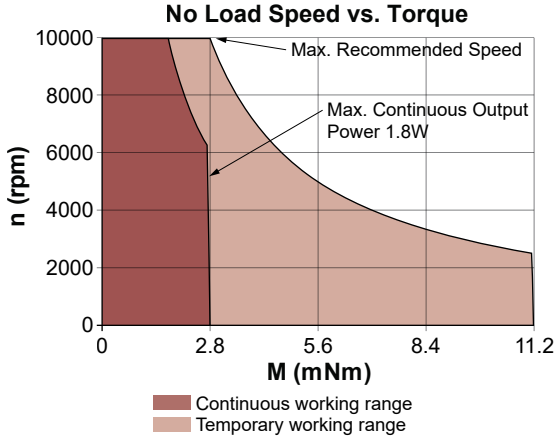

▶ Motor shaft rotates CW when seen from motor front face when +ve and -ve supply is given to respective terminals.

V092020 • © 2020 Portescap. Specifications subject to change without notice.

17DCT Athlonix™

Ø 17 mm • Precious metal commutation • 6.14 mNm

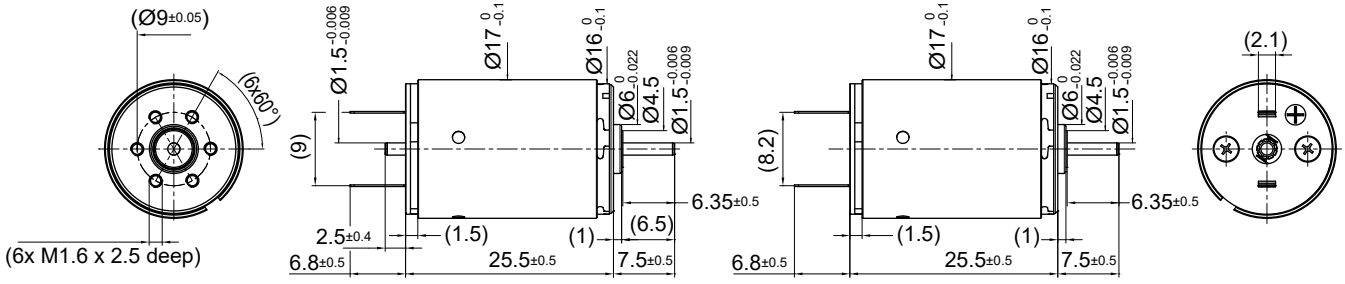

17DCT 26P2 •••• .2

17DCT 26P1 •••• .1

Dimensions in mm.

Electrical Data	Symbol	17DCT 26P1/P2 •••• .* 216P	211P	209P	208P	207P	Unit
1 Nominal Voltage	V	3	6	9	12	15	Volt
2 No-Load Speed	n_0	7838	7842	7645	8158	8358	rpm
3 No-Load Current	I_0	24.7	12.3	8.0	6.4	5.3	mA
4 Terminal Resistance	R	0.9	3.3	7.7	12.1	18.6	Ω
5 Output Power	$P_{2max.}$	4.6	4.7	4.8	4.7	4.7	W
6 Stall Torque	mNm	12.31 (1.75)	13.21 (1.88)	13.02 (1.85)	13.79 (1.96)	13.62 (1.93)	mNm (oz-in)
7 Efficiency	$h_{max.}$	84	84	84	85	84	%
8 Max Continuous Speed	$n_{e\ max.}$	10000	10000	10000	10000	10000	rpm
9 Max Continuous Torque	$M_{e\ max.}$	5.81 (0.83)	6.02 (0.86)	6.05 (0.86)	6.03 (0.86)	5.92 (0.84)	mNm (oz-in)
10 Max Continuous Current	$I_{e\ max.}$	1.63	0.84	0.55	0.44	0.35	A
11 Back-EMF Constant	k_E	0.38	0.76	1.17	1.46	1.78	mV/rpm
12 Torque Constant	k_M	3.63	7.26	11.16	13.96	17.03	mNm/A
13 Motor Regulation	R/k^2	66.64	62.15	61.45	61.92	64.25	10^3/Nms
14 Friction Torque	T_F	0.08 (0.011)	0.08 (0.011)	0.08 (0.011)	0.08 (0.011)	0.08 (0.011)	mNm (oz-in)
15 Mechanical Time Constant	τ_m	7.01	6.41	6.30	6.27	6.25	ms
16 Rotor Inertia	J	1.05	1.03	1.02	1.01	0.97	g-cm²

General Data			
17 Thermal Resistance (rotor/body)	R_{th1}/R_{th2}	6/25	°C/W
18 Thermal Time Constant (rotor/stator)	t_{W1}/t_{W2}	12/250	S
19 Operating Temperature Range:	motor	-30°C to 85°C (-22°F to 185°F)	°C (°F)
	rotor	100°C (212°F)	°C (°F)
20 Shaft Load Max.:		With sleeve bearings	
(5 mm. from bearing)	-radial	1.5 (5.39)	N (oz)
	-axial	100 (359.6)	N (oz)
21 Shaft Play:	-radial	0.03 (0.0012)	mm (inch)
	-axial	0.15 (0.0059)	mm (inch)
22 Weight	g	27 (0.96)	g (oz)
23 Commutation Segment	-	9	segment

*Also available with ball bearing

Execution Table

Gearbox	Single Shaft	MR2	M Sense B
R16	1	2	10
B16	3	4	11
BA16	3	4	11

Note:
P1: standard commutation
P2: special commutation for double shaft version

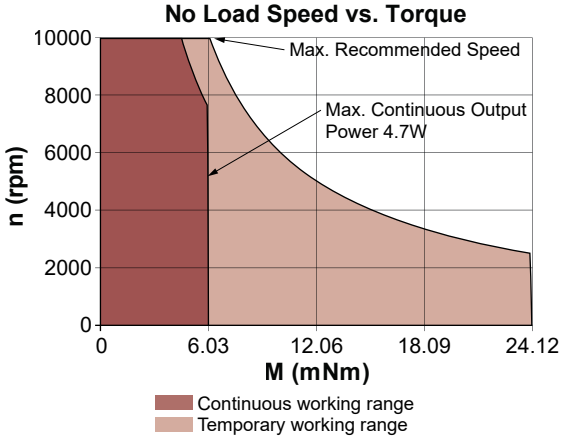

▶ Motor shaft rotates CW when seen from motor front face when +ve and -ve supply is given to respective terminals.

17DCT Athlonix™

Ø 17 mm • Precious metal commutation • 6.14 mNm

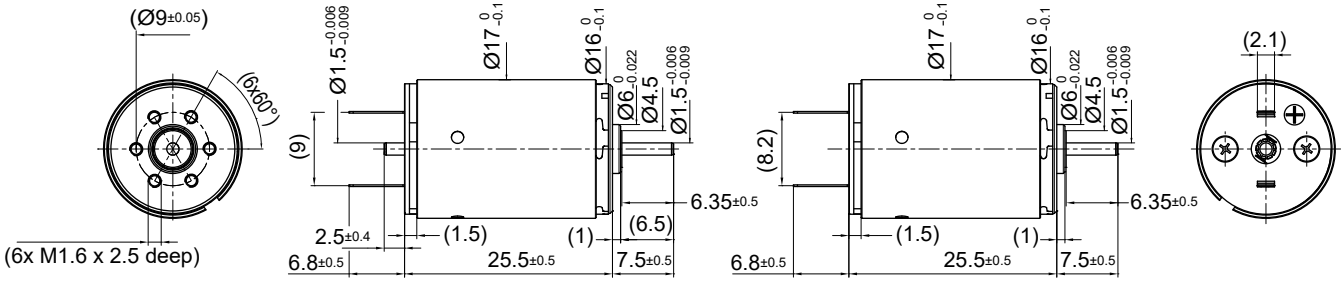

17DCT 26P2 •••• .2 17DCT 26P1 •••• .1

Dimensions in mm.

Electrical Data	Symbol	17DCT 26P1/P2 •••• .* 209E	205P	107P	205E	Unit
1 Nominal Voltage	V	18	24	36	48	Volt
2 No-Load Speed	n_0	8030	7769	9800	8145	rpm
3 No-Load Current	I_0	4.2	3.1	2.6	1.6	mA
4 Terminal Resistance	R	30.7	51.4	76.0	208.1	Ω
5 Output Power	$P_{2max.}$	4.5	4.8	4.7	4.6	W
6 Stall Torque	mNm	12.36 (1.76)	13.6 (1.93)	16.43 (2.33)	12.8 (1.82)	mNm (oz-in)
7 Efficiency	$h_{max.}$	84	84	86	84	%
8 Max Continuous Speed	$n_{e\ max.}$	10000	10000	10000	10000	rpm
9 Max Continuous Torque	$M_{e\ max.}$	5.75 (0.82)	6.14 (0.87)	6 (0.85)	5.8 (0.83)	mNm (oz-in)
10 Max Continuous Current	$I_{e\ max.}$	0.27	0.21	0.17	0.11	A
11 Back-EMF Constant	k_E	2.23	3.07	3.65	5.85	mV/rpm
12 Torque Constant	k_M	21.25	29.31	34.89	55.88	mNm/A
13 Motor Regulation	R/k^2	68.01	59.79	62.45	66.62	10^3/Nms
14 Friction Torque	T_F	0.08 (0.011)	0.08 (0.011)	0.08 (0.011)	0.08 (0.011)	mNm (oz-in)
15 Mechanical Time Constant	τ_m	7.06	6.23	6.22	7.04	ms
16 Rotor Inertia	J	1.04	1.04	1.00	1.06	g-cm²

General Data			
17 Thermal Resistance (rotor/body)	R_{th1}/R_{th2}	6/25	°C/W
18 Thermal Time Constant (rotor/stator)	t_{W1}/t_{W2}	12/250	S
19 Operating Temperature Range:	motor rotor	-30°C to 85°C (-22°F to 185°F) 100°C (212°F)	°C (°F) °C (°F)
20 Shaft Load Max.: (5 mm. from bearing)	 -radial -axial	With sleeve bearings 1.5 (5.39) 100 (359.6)	 N (oz) N (oz)
21 Shaft Play:	-radial -axial	0.03 (0.0012) 0.15 (0.0059)	mm (inch) mm (inch)
22 Weight	g	27 (0.96)	g (oz)
23 Commutation Segment	-	9	segment

*Also available with ball bearing

Execution Table

Gearbox	Single Shaft	MR2	M Sense B
R16	1	2	10
B16	3	4	11
BA16	3	4	11

Note:
P1: standard commutation
P2: special commutation for double shaft version

▶ Motor shaft rotates CW when seen from motor front face when +ve and -ve supply is given to respective terminals.

No Load Speed vs. Torque

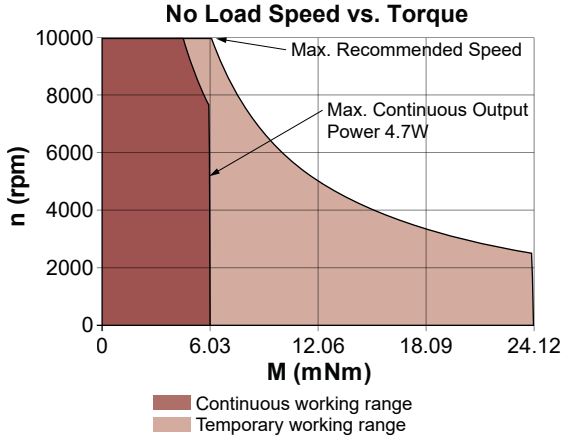

V092020 • © 2020 Portescap. Specifications subject to change without notice.

17DCT Athlonix™

Ø 17 mm • Graphite-Copper commutation • 5.88 mNm

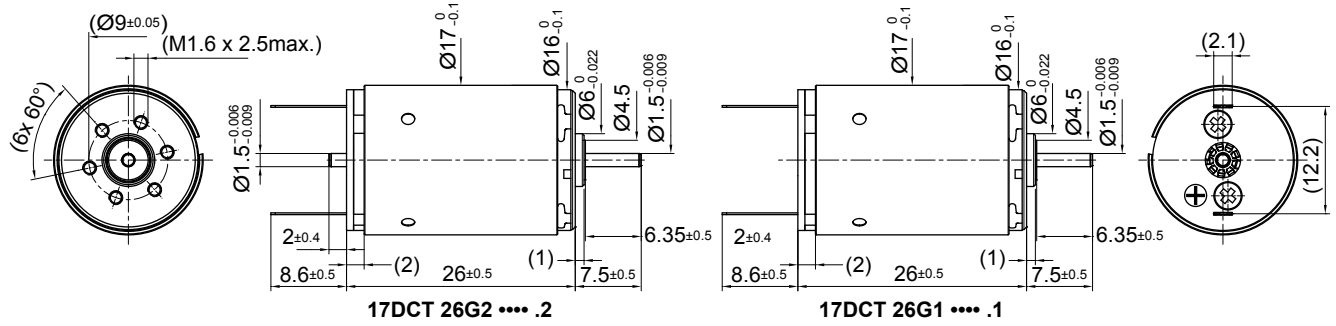

17DCT 26G2 •••• .2 17DCT 26G1 •••• .1

Dimensions in mm.

Electrical Data	Symbol	17DCT 26G1/G2 •••• .* 216P	211P	209P	208P	207P	Unit
1 Nominal Voltage	V	3	6	9	12	15	Volt
2 No-Load Speed	n_0	7657	7690	7498	8011	8206	rpm
3 No-Load Current	I_0	92.6	46.3	30.1	24.1	19.7	mA
4 Terminal Resistance	R	1.0	3.4	7.8	12.2	18.7	Ω
5 Output Power	$P_{2max.}$	4.1	4.5	4.5	4.5	4.4	W
6 Stall Torque	mNm	10.8 (1.53)	12.57 (1.79)	12.61 (1.79)	13.43 (1.91)	13.3 (1.89)	mNm (oz-in)
7 Efficiency	$h_{max.}$	68	70	70	71	71	%
8 Max Continuous Speed	$n_{e\ max.}$	10000	10000	10000	10000	10000	rpm
9 Max Continuous Torque	$M_{e\ max.}$	5.25 (0.75)	5.68 (0.81)	5.77 (0.82)	5.76 (0.82)	5.65 (0.81)	mNm (oz-in)
10 Max Continuous Current	$I_{e\ max.}$	1.54	0.83	0.55	0.44	0.35	A
11 Back-EMF Constant	k_E	0.38	0.76	1.17	1.46	1.78	mV/rpm
12 Torque Constant	k_M	3.63	7.26	11.16	13.96	17.03	mNm/A
13 Motor Regulation	R/k^2	74.24	64.05	62.25	62.43	64.59	10^3/Nms
14 Friction Torque	T_F	0.3 (0.042)	0.3 (0.042)	0.3 (0.042)	0.3 (0.042)	0.3 (0.042)	mNm (oz-in)
15 Mechanical Time Constant	τ_m	7.81	6.61	6.38	6.32	6.28	ms
16 Rotor Inertia	J	1.05	1.03	1.02	1.01	0.97	g-cm²

General Data			
17 Thermal Resistance (rotor/body)	R_{th1}/R_{th2}	6/25	°C/W
18 Thermal Time Constant (rotor/stator)	t_{W1}/t_{W2}	12/250	S
19 Operating Temperature Range:	motor	-30°C to 85°C (-22°F to 185°F)	°C (°F)
	rotor	100°C (212°F)	°C (°F)
20 Shaft Load Max.:		With sleeve bearings	
(5 mm. from bearing)	-radial	1.5 (5.39)	N (oz)
	-axial	100 (359.6)	N (oz)
21 Shaft Play:	-radial	0.03 (0.0012)	mm (inch)
	-axial	0.15 (0.0059)	mm (inch)
22 Weight	g	27 (0.96)	g (oz)
23 Commutation Segment	-	9	segment

*Also available with ball bearing

Execution Table

Gearbox	Single Shaft	MR2	M Sense B
R16	1	2	10
B16	3	4	11
BA16	3	4	11

Note:
G1: standard commutation
G2: special commutation for double shaft version

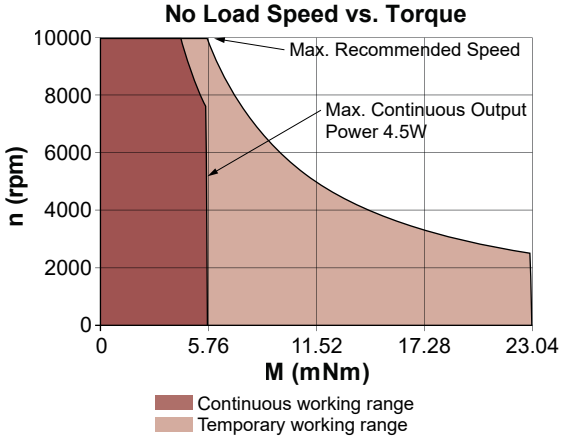

▶ Motor shaft rotates CW when seen from motor front face when +ve and -ve supply is given to respective terminals.

17DCT Athlonix™

Ø 17 mm • Graphite-Copper commutation • 5.88 mNm

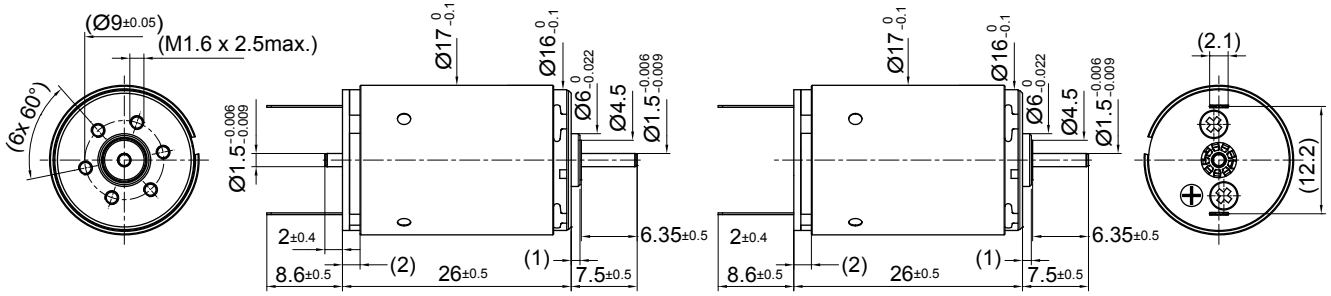

17DCT 26G2 •••• .2 17DCT 26G1 •••• .1

Dimensions in mm.

Electrical Data	Symbol	17DCT 26G1/G2 •••• .* 209E	205P	107P	205E	Unit
1 Nominal Voltage	V	18	24	36	48	Volt
2 No-Load Speed	n_0	7869	7628	9653	7988	rpm
3 No-Load Current	I_0	15.8	11.5	9.6	6.0	mA
4 Terminal Resistance	R	30.8	51.5	76.1	208.2	Ω
5 Output Power	$P_{2max.}$	4.3	4.6	4.5	4.4	W
6 Stall Torque	mNm	12.07 (1.71)	13.33 (1.89)	16.16 (2.29)	12.55 (1.78)	mNm (oz-in)
7 Efficiency	$h_{max.}$	70	71	73	70	%
8 Max Continuous Speed	$n_{e\ max.}$	10000	10000	10000	10000	rpm
9 Max Continuous Torque	$M_{e\ max.}$	5.49 (0.78)	5.88 (0.84)	5.75 (0.82)	5.56 (0.79)	mNm (oz-in)
10 Max Continuous Current	$I_{e\ max.}$	0.27	0.21	0.17	0.11	A
11 Back-EMF Constant	k_E	2.23	3.07	3.65	5.85	mV/rpm
12 Torque Constant	k_M	21.25	29.31	34.89	55.88	mNm/A
13 Motor Regulation	R/k^2	68.23	59.91	62.53	66.65	10^3/Nms
14 Friction Torque	T_F	0.3 (0.042)	0.3 (0.042)	0.3 (0.042)	0.3 (0.042)	mNm (oz-in)
15 Mechanical Time Constant	τ_m	7.08	6.24	6.23	7.04	ms
16 Rotor Inertia	J	1.04	1.04	1.00	1.06	g-cm²

General Data			
17 Thermal Resistance (rotor/body)	R_{th1}/R_{th2}	6/25	°C/W
18 Thermal Time Constant (rotor/stator)	t_{W1}/t_{W2}	12/250	S
19 Operating Temperature Range:	motor rotor	-30°C to 85°C (-22°F to 185°F) 100°C (212°F)	°C (°F) °C (°F)
20 Shaft Load Max.: (5 mm. from bearing)	 -radial -axial	With sleeve bearings 1.5 (5.39) 100 (359.6)	 N (oz) N (oz)
21 Shaft Play:	-radial -axial	0.03 (0.0012) 0.15 (0.0059)	mm (inch) mm (inch)
22 Weight	g	27 (0.96)	g (oz)
23 Commutation Segment	-	9	segment

*Also available with ball bearing

Execution Table

Gearbox	Single Shaft	MR2	M Sense B
R16	1	2	10
B16	3	4	11
BA16	3	4	11

Note:
G1: standard commutation
G2: special commutation for double shaft version

▶ Motor shaft rotates CW when seen from motor front face when +ve and -ve supply is given to respective terminals.

No Load Speed vs. Torque

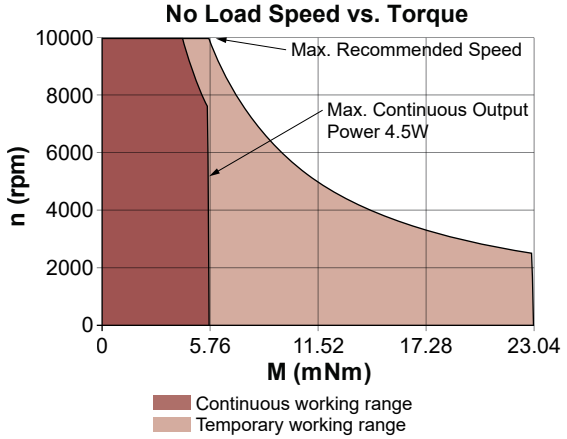

V092020 • © 2020 Portescap. Specifications subject to change without notice.

17N78

Ø 17 mm • Precious metal commutation • 5.7 mNm

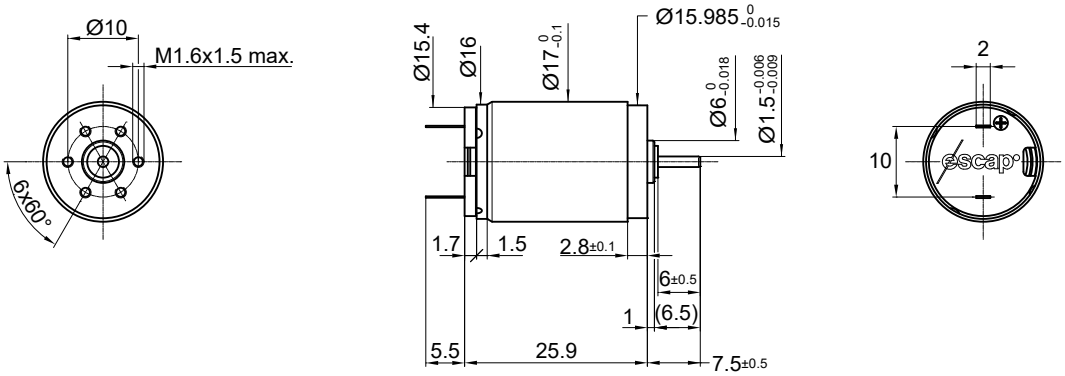

Dimensions in mm.

Electrical Data	Symbol	17N78 •••• .1 216E	210E	208E	207E	Unit
1 Nominal Voltage	V	6	12	18	24	Volt
2 No-Load Speed	n_0	8,480	8,460	8,460	8,900	rpm
3 No-Load Current	I_0	16.0	7.7	4.9	3.5	mA
4 Terminal Resistance	R	3.2	17.3	38.4	65.0	Ω
5 Output Power	$P_{2max.}$	3.6	3.1	3.2	3.1	W
6 Stall Torque	mNm	12.5 (1.78)	9.3 (1.32)	9.4 (1.34)	9.4 (1.34)	mNm (oz-in)
7 Efficiency	$h_{max.}$	82	80	81	81	%
8 Max Continuous Speed	$n_{e\ max.}$	10,000	10,000	10,000	10,000	rpm
9 Max Continuous Torque	$M_{e\ max.}$	5.7 (0.81)	4.8 (0.68)	4.9 (0.7)	4.8 (0.68)	mNm (oz-in)
10 Max Continuous Current	$I_{e\ max.}$	0.86	0.37	0.25	0.19	A
11 Back-EMF Constant	k_E	0.70	1.40	2.10	2.67	mV/rpm
12 Torque Constant	k_M	6.70	13.40	20.10	25.50	mNm/A
13 Motor Regulation	R/k^2	71.3	96.3	95.05	99.96	10^3/Nms
14 Friction Torque	T_F	0.1 (0.02)	0.1 (0.02)	0.1 (0.02)	0.09 (0.02)	mNm (oz-in)
15 Rotor Inductance	L	0.11	0.40	0.90	1.41	mH
16 Mechanical Time Constant	τ_m	7.8	7.7	7.2	7.2	ms
17 Rotor Inertia	J	1.10	0.80	0.76	0.72	g-cm²

General Data			
18 Thermal Resistance (rotor/body)	R_{th1}/R_{th2}	10/30	°C/W
19 Thermal Time Constant (rotor/stator)	t_{W1}/t_{W2}	7/400	S
20 Operating Temperature Range:	motor rotor	-30°C to 85°C (-22°F to 185°F) 100°C (212°F)	°C (°F) °C (°F)
21 Shaft Load Max.: (5 mm. from bearing)	 -radial -axial	With sleeve bearings 1.5 (5.4) 100 (359.6)	 N (oz) N (oz)
22 Shaft Play:	-radial -axial	<0.03 (0.0012) 0.15 (0.0059)	mm (inch) mm (inch)
23 Weight	g	27 (0.96)	g (oz)
24 Commutation Segment	-	9	segment

Execution Table

Gearbox	Single Shaft	F16	MR2
B16	5	5	Upon Request
BA16	5	5	Upon Request
R16	1	1	Upon Request

No Load Speed vs. Torque

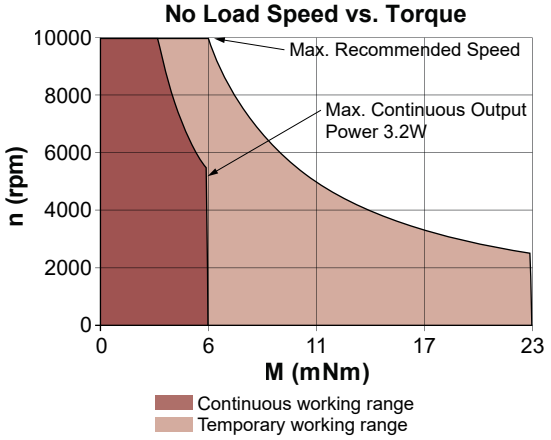

▶ Motor shaft rotates CW when seen from motor front face when +ve and -ve supply is given to respective terminals.

17S78

Ø 17 mm • Precious metal commutation • 2.8 mNm

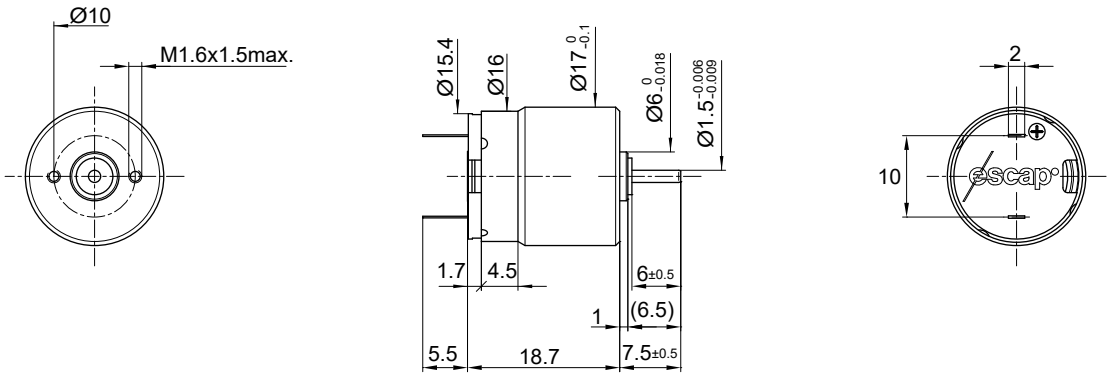

Dimensions in mm.

Electrical Data	Symbol	17S78 •••• .1 208P	210E	209E	Unit
1 Nominal Voltage	V	6	7.5	12	Volt
2 No-Load Speed	n_0	10,280	10,865	12,430	rpm
3 No-Load Current	I_0	25.0	18.0	8.4	mA
4 Terminal Resistance	R	7.5	12.2	18.6	Ω
5 Output Power	$P_{2max.}$	1.7	1.6	1.8	W
6 Stall Torque	mNm	4.3 (0.61)	3.9 (0.56)	5.9 (0.84)	mNm (oz-in)
7 Efficiency	$h_{max.}$	68	69	78	%
8 Max Continuous Speed	$n_{e\ max.}$	10,000	10,000	10,000	rpm
9 Max Continuous Torque	$M_{e\ max.}$	2.6 (0.34)	2.4 (0.34)	2.8 (0.4)	mNm (oz-in)
10 Max Continuous Current	$I_{e\ max.}$	0.50	0.38	0.32	A
11 Back-EMF Constant	k_E	0.57	0.67	0.95	mV/rpm
12 Torque Constant	k_M	5.40	6.40	9.10	mNm/A
13 Motor Regulation	R/k^2	255.0	300.0	225.0	10^3/Nms
14 Friction Torque	T_F	0.12 (0.02)	0.12 (0.02)	0.08 (0.02)	mNm (oz-in)
15 Rotor Inductance	L	0.15	0.23	0.35	mH
16 Mechanical Time Constant	τ_m	12.8	15.0	11.3	ms
17 Rotor Inertia	J	0.50	0.50	0.50	g-cm²

General Data			
18 Thermal Resistance (rotor/body)	R_{th1}/R_{th2}	13/38	°C/W
19 Thermal Time Constant (rotor/stator)	t_{W1}/t_{W2}	7/400	S
20 Operating Temperature Range:	motor rotor	-30°C to 85°C (-22°F to 185°F) 100°C (212°F)	°C (°F) °C (°F)
21 Shaft Load Max.: (5 mm. from bearing)	 -radial -axial	With sleeve bearings 1.5 (5.4) 100 (359.6)	 N (oz) N (oz)
22 Shaft Play:	-radial -axial	<0.03 (0.0012) 0.15 (0.0059)	mm (inch) mm (inch)
23 Weight	g	19 (0.68)	g (oz)
24 Commutation Segment	-	9	segment

Execution Table

Gearbox	Single Shaft	F16	MR2
B16	5	5	Upon Request
BA16	5	5	Upon Request
R16	1	1	96

No Load Speed vs. Torque

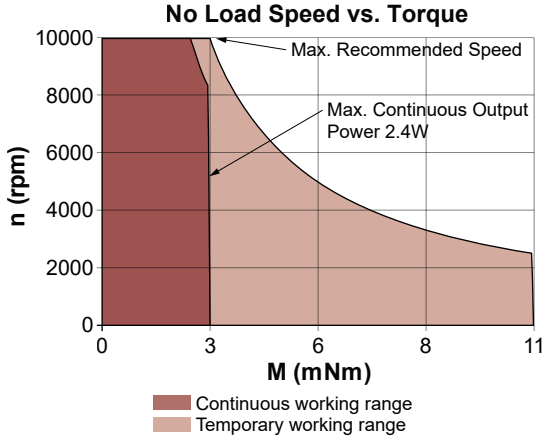

▶ Motor shaft rotates CW when seen from motor front face when +ve and -ve supply is given to respective terminals.

V092020 • © 2020 Portescap. Specifications subject to change without notice.

22DCP Athlonix™

Ø 22 mm • Precious metal commutation • 6.5 mNm

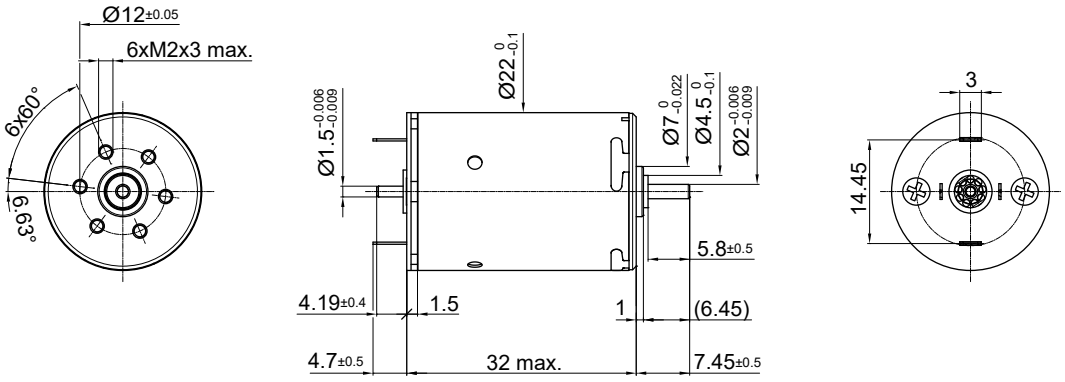

Dimensions in mm.

Electrical Data	Symbol	22DCP 32P2 •••• .2						Unit
		221P	216P	213P	211P	210P	209P	
1 Nominal Voltage	V	3	6	9	12	15	18	Volt
2 No-Load Speed	n_0	8321	9739	10022	9741	9741	9348	rpm
3 No-Load Current	I_0	58.9	34.4	23.6	17.2	13.8	11.0	mA
4 Terminal Resistance	R	0.7	2.0	4.1	7.8	12.1	18.6	Ω
5 Output Power	$P_{2max.}$	2.9	4.1	4.4	4.2	4.2	4.0	W
6 Stall Torque	mNm	13.65 (1.94)	17.47 (2.48)	18.34 (2.6)	17.81 (2.53)	17.83 (2.53)	17.37 (2.46)	mNm (oz-in)
7 Efficiency	$h_{max.}$	77	80	80	80	80	80	%
8 Max Continuous Speed	$n_{e\ max.}$	10000	10000	10000	10000	10000	10000	rpm
9 Max Continuous Torque	$M_{e\ max.}$	6.09 (0.87)	6.38 (0.91)	6.45 (0.92)	6.44 (0.92)	6.45 (0.92)	6.5 (0.93)	mNm (oz-in)
10 Max Continuous Current	$I_{e\ max.}$	1.85	1.13	0.78	0.57	0.46	0.37	A
11 Back-EMF Constant	k_E	0.36	0.61	0.89	1.22	1.52	1.90	mV/rpm
12 Torque Constant	k_M	3.39	5.82	8.48	11.63	14.54	18.18	mNm/A
13 Motor Regulation	R/k^2	63.83	58.37	57.22	57.28	57.22	56.34	10^3/Nms
14 Friction Torque	T_F	0.2 (0.03)	0.2 (0.03)	0.2 (0.03)	0.2 (0.03)	0.2 (0.03)	0.2 (0.03)	mNm (oz-in)
15 Mechanical Time Constant	τ_m	30.63	27.87	27.12	26.81	26.68	26.60	ms
16 Rotor Inertia	J	4.80	4.78	4.74	4.68	4.66	4.72	g-cm²

General Data			
17 Thermal Resistance (rotor/body)	R_{th1}/R_{th2}	6/22	°C/W
18 Thermal Time Constant (rotor/stator)	t_{W1}/t_{W2}	9/550	S
19 Operating Temperature Range:	motor rotor	-30°C to 85°C (-22°F to 185°F) 100°C (212°F)	°C (°F) °C (°F)
20 Shaft Load Max.: (5 mm. from bearing)	 -radial -axial	With sleeve bearings 1.5 (5.39) 100 (359.6)	 N (oz) N (oz)
21 Shaft Play:	-radial -axial	0.03 (0.0012) 0.15 (0.0059)	mm (inch) mm (inch)
22 Weight	g	58 (2.05)	g (oz)
23 Commutation Segment	-	9	segment

*Also available with ball bearing

Execution Table

Gearbox	Single Shaft	MR2	E9
R22	4	5	6
K24	7	8	9
K27	1	2	3
R22HT	11	Upon Request	Upon Request

Note:
P1: standard commutation
P2: special commutation for double shaft version

▶ Motor shaft rotates CW when seen from motor front face when +ve and -ve supply is given to respective terminals.

No Load Speed vs. Torque

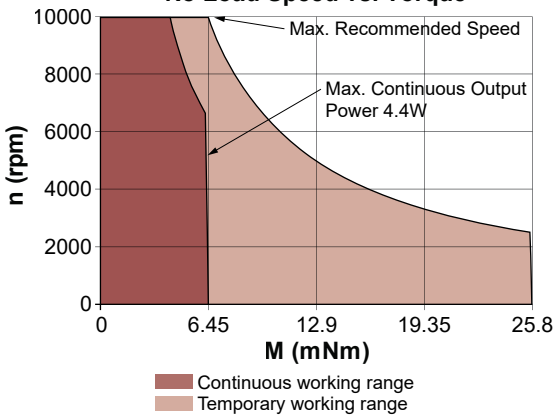

22DCP Athlonix™

Ø 22 mm • Precious metal commutation • 6.5 mNm

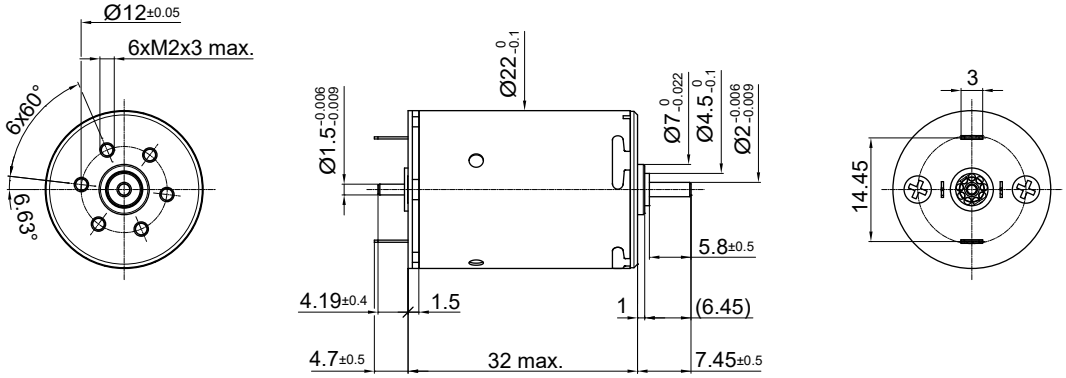

Dimensions in mm.

Electrical Data	Symbol	22DCP 32P2 •••• .2					Unit
		212E	211E	210E	209E	208E	
1 Nominal Voltage	V	21	24	30	36	48	Volt
2 No-Load Speed	n_0	10,357	10,465	10,806	10,281	11,049	rpm
3 No-Load Current	I_0	10.5	9.2	7.6	6.1	4.9	mA
4 Terminal Resistance	R	23.4	30.4	46.1	71.7	112.6	Ω
5 Output Power	$P_{2max.}$	4.2	4.3	4.4	4.1	4.5	W
6 Stall Torque	mNm	16.95 (2.41)	16.89 (2.4)	16.85 (2.39)	16.39 (2.33)	17.28 (2.45)	mNm (oz-in)
7 Efficiency	$h_{max.}$	80	80	80	79	80	%
8 Max Continuous Speed	$n_{e\ max.}$	10,000	10,000	10,000	10,000	10,000	rpm
9 Max Continuous Torque	$M_{e\ max.}$	6.08 (0.86)	6.04 (0.86)	5.93 (0.84)	6 (0.85)	5.94 (0.85)	mNm (oz-in)
10 Max Continuous Current	$I_{e\ max.}$	0.33	0.29	0.23	0.19	0.15	A
11 Back-EMF Constant	k_E	2.00	2.27	2.74	3.46	4.29	mV/rpm
12 Torque Constant	k_M	19.14	21.64	26.20	33.03	41.01	mNm/A
13 Motor Regulation	R/k^2	64.0	64.9	67.2	65.70	66.95	10^3/Nms
14 Friction Torque	T_F	0.2 (0.03)	0.2 (0.03)	0.2 (0.03)	0.2 (0.03)	0.2 (0.03)	mNm (oz-in)
15 Mechanical Time Constant	τ_m	30.1	30.0	30.0	30.0	30.0	ms
16 Rotor Inertia	J	4.70	4.63	4.47	4.56	4.48	g-cm²

General Data			
17 Thermal Resistance (rotor/body)	R_{th1}/R_{th2}	6/22	°C/W
18 Thermal Time Constant (rotor/stator)	t_{W1}/t_{W2}	9/550	S
19 Operating Temperature Range:	motor	-30°C to 85°C (-22°F to 185°F)	°C (°F)
	rotor	100°C (212°F)	°C (°F)
20 Shaft Load Max.:		With sleeve bearings	
(5 mm. from bearing)	-radial	1.5 (5.39)	N (oz)
	-axial	100 (359.6)	N (oz)
21 Shaft Play:	-radial	0.03 (0.0012)	mm (inch)
	-axial	0.15 (0.0059)	mm (inch)
22 Weight	g	58 (2.05)	g (oz)
23 Commutation Segment	-	9	segment

*Also available with ball bearing

Execution Table

Gearbox	Single Shaft	MR2	E9
R22	4	5	6
K24	7	8	9
K27	1	2	3
R22HT	11	Upon Request	Upon Request

Note:
P1: standard commutation
P2: special commutation for double shaft version

▶ Motor shaft rotates CW when seen from motor front face when +ve and -ve supply is given to respective terminals.

No Load Speed vs. Torque

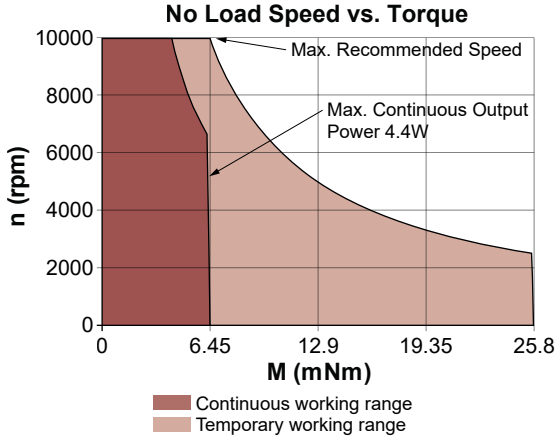

V092020 • © 2020 Portescap. Specifications subject to change without notice.

22DCP Athlonix™

Ø 22 mm • Graphite-Copper commutation • 6.21 mNm

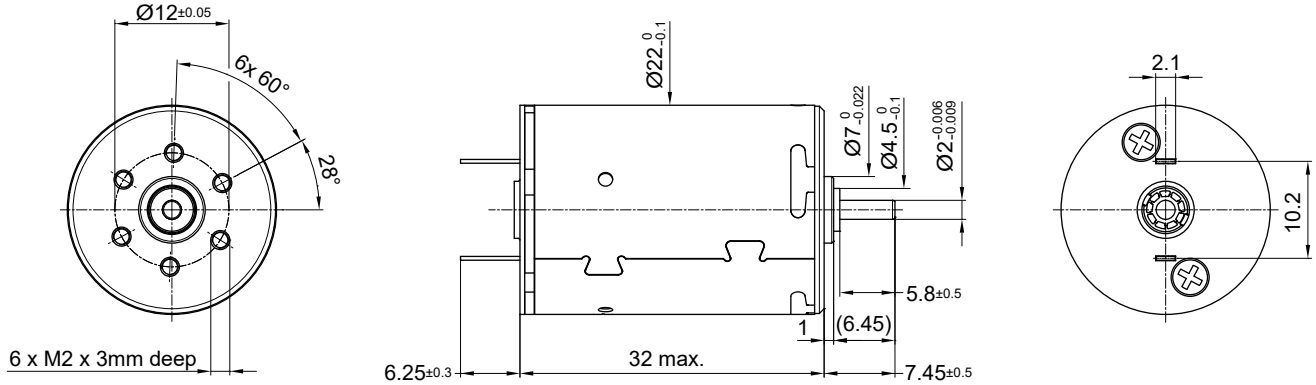

Dimensions in mm.

Electrical Data	Symbol	22DCP 32G1 •••• .1						Unit
		221P	216P	213P	211P	210P	209P	
1 Nominal Voltage	V	3	6	9	12	15	18	Volt
2 No-Load Speed	n_0	8094	9574	9874	9598	9600	9211	rpm
3 No-Load Current	I_0	132.6	77.4	53.0	38.7	30.9	24.8	mA
4 Terminal Resistance	R	0.9	2.2	4.3	8.0	12.3	18.8	Ω
5 Output Power	$P_{2max.}$	2.2	3.7	4.1	3.9	4.0	3.8	W
6 Stall Torque	mNm	10.44 (1.48)	15.6 (2.21)	17.23 (2.45)	17.1 (2.43)	17.29 (2.45)	16.94 (2.4)	mNm (oz-in)
7 Efficiency	$h_{max.}$	63	69	71	71	71	70	%
8 Max Continuous Speed	$n_{e\ max.}$	10000	10000	10000	10000	10000	10000	rpm
9 Max Continuous Torque	$M_{e\ max.}$	5.13 (0.73)	5.82 (0.83)	6.04 (0.86)	6.11 (0.87)	6.14 (0.87)	6.21 (0.88)	mNm (oz-in)
10 Max Continuous Current	$I_{e\ max.}$	1.64	1.08	0.77	0.56	0.45	0.37	A
11 Back-EMF Constant	k_E	0.36	0.61	0.89	1.22	1.52	1.90	mV/rpm
12 Torque Constant	k_M	3.39	5.82	8.48	11.63	14.54	18.18	mNm/A
13 Motor Regulation	R/k^2	81.20	64.28	60.00	58.76	58.16	56.95	10^3/Nms
14 Friction Torque	T_F	0.45 (0.07)	0.45 (0.07)	0.45 (0.07)	0.45 (0.07)	0.45 (0.07)	0.45 (0.07)	mNm (oz-in)
15 Mechanical Time Constant	τ_m	38.97	30.70	28.44	27.50	27.12	26.89	ms
16 Rotor Inertia	J	4.80	4.78	4.74	4.68	4.66	4.72	g-cm²

General Data			
17 Thermal Resistance (rotor/body)	R_{th1}/R_{th2}	6/22	°C/W
18 Thermal Time Constant (rotor/stator)	t_{W1}/t_{W2}	9/550	S
19 Operating Temperature Range:	motor	-30°C to 85°C (-22°F to 185°F)	°C (°F)
	rotor	100°C (212°F)	°C (°F)
20 Shaft Load Max.:		With sleeve bearings	
(5 mm. from bearing)	-radial	1.5 (5.39)	N (oz)
	-axial	100 (359.6)	N (oz)
21 Shaft Play:	-radial	0.03 (0.0012)	mm (inch)
	-axial	0.15 (0.0059)	mm (inch)
22 Weight	g	58 (2.05)	g (oz)
23 Commutation Segment	-	9	segment

*Also available with ball bearing

Execution Table

Gearbox	Single Shaft	MR2	E9
R22	4	5	6
K24	7	8	9
K27	1	2	3
R22HT	11	Upon Request	Upon Request

Note:
G1: standard commutation
G2: special commutation for double shaft version

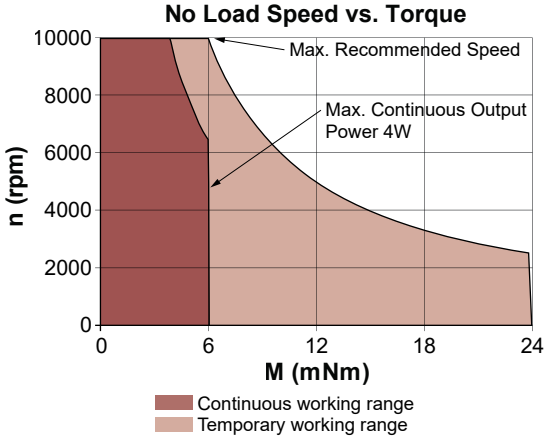

▶ Motor shaft rotates CW when seen from motor front face when +ve and -ve supply is given to respective terminals.

22DCP Athlonix™

Ø 22 mm • Graphite-Copper commutation • 6.21 mNm

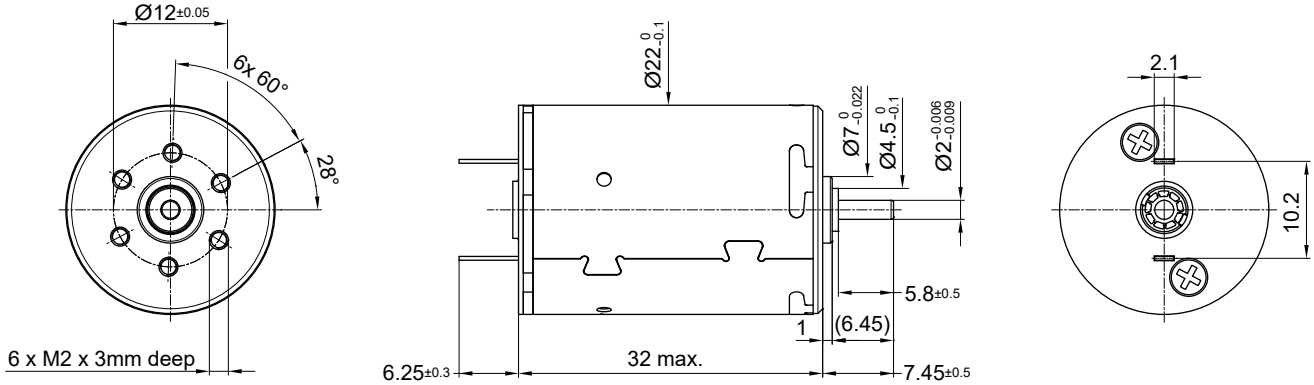

Dimensions in mm.

Electrical Data	Symbol	22DCP 32G1 •••• .1					Unit
		212E	211E	210E	209E	208E	
1 Nominal Voltage	V	21	24	30	36	48	Volt
2 No-Load Speed	n_0	10,201	10,308	10,645	10,123	10,889	rpm
3 No-Load Current	I_0	23.5	20.8	17.2	13.6	11.0	mA
4 Terminal Resistance	R	23.6	30.6	46.3	71.9	112.8	Ω
5 Output Power	$P_{2max.}$	4.0	4.1	4.2	3.9	4.3	W
6 Stall Torque	mNm	16.56 (2.35)	16.53 (2.35)	16.53 (2.35)	16.09 (2.28)	17 (2.41)	mNm (oz-in)
7 Efficiency	$h_{max.}$	70	70	70	70	70	%
8 Max Continuous Speed	$n_{e\ max.}$	10,000	10,000	10,000	10,000	10,000	rpm
9 Max Continuous Torque	$M_{e\ max.}$	5.81 (0.83)	5.77 (0.82)	5.67 (0.81)	5.74 (0.82)	5.69 (0.81)	mNm (oz-in)
10 Max Continuous Current	$I_{e\ max.}$	0.33	0.29	0.23	0.19	0.15	A
11 Back-EMF Constant	k_E	2.00	2.27	2.74	3.46	4.29	mV/rpm
12 Torque Constant	k_M	19.14	21.64	26.20	33.03	41.01	mNm/A
13 Motor Regulation	R/k^2	64.5	65.3	67.4	65.89	67.07	10^3/Nms
14 Friction Torque	T_F	0.45 (0.07)	0.45 (0.07)	0.45 (0.07)	0.45 (0.07)	0.45 (0.07)	mNm (oz-in)
15 Mechanical Time Constant	τ_m	30.3	30.2	30.1	30.1	30.0	ms
16 Rotor Inertia	J	4.70	4.63	4.47	4.56	4.48	g-cm²

General Data			
17 Thermal Resistance (rotor/body)	R_{th1}/R_{th2}	6.22	°C/W
18 Thermal Time Constant (rotor/stator)	t_{W1}/t_{W2}	9/550	S
19 Operating Temperature Range:	motor	-30°C to 85°C (-22°F to 185°F)	°C (°F)
	rotor	100°C (212°F)	°C (°F)
20 Shaft Load Max.:		With sleeve bearings	
(5 mm. from bearing)	-radial	1.5 (5.39)	N (oz)
	-axial	100 (359.6)	N (oz)
21 Shaft Play:	-radial	0.03 (0.0012)	mm (inch)
	-axial	0.15 (0.0059)	mm (inch)
22 Weight	g	58 (2.05)	g (oz)
23 Commutation Segment	-	9	segment

*Also available with ball bearing

Execution Table

Gearbox	Single Shaft	MR2	E9
R22	4	5	6
K24	7	8	9
K27	1	2	3
R22HT	11	Upon Request	Upon Request

Note:
G1: standard commutation
G2: special commutation for double shaft version

▶ Motor shaft rotates CW when seen from motor front face when +ve and -ve supply is given to respective terminals.

No Load Speed vs. Torque

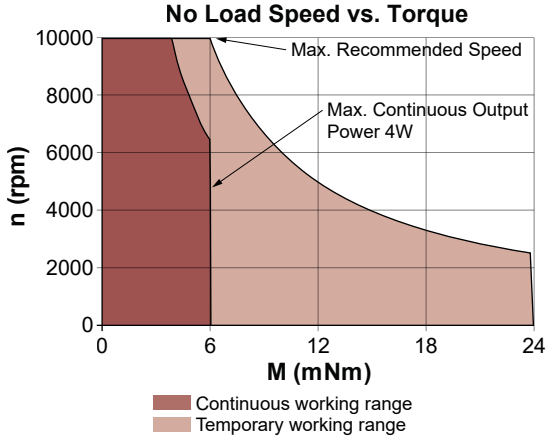

V092020 • © 2020 Portescap. Specifications subject to change without notice.

22DCT Athlonix™

Ø 22 mm • Precious metal commutation • 13.28 mNm

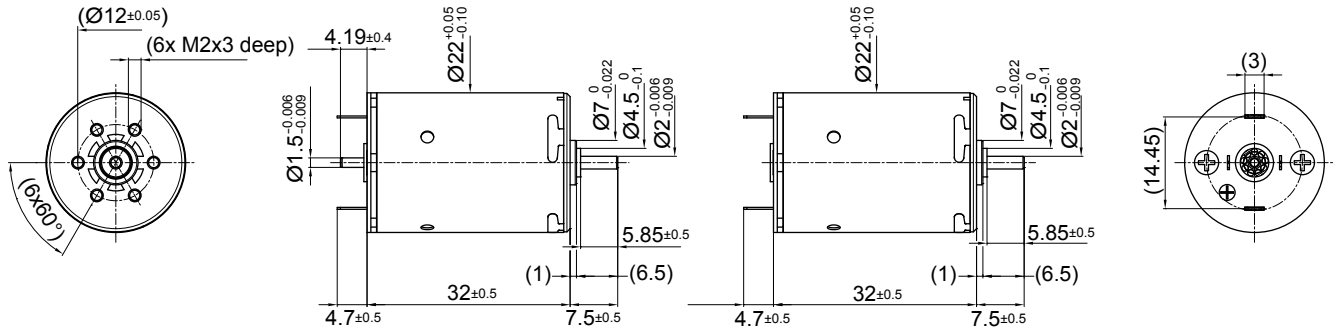

22DCT 32P2 •••• .2 | 22DCT 32P2 •••• .14

Dimensions in mm.

Electrical Data		Symbol	22DCT 32P2 •••• .* 135P	225P	228E	226E	224E	220E	Unit
1	Nominal Voltage	V	3	6	6	9	12	12	Volt
2	No-Load Speed	n_0	5525	8525	5887	7071	8131	6040	rpm
3	No-Load Current	I_0	42.7	32.8	22.7	18.2	15.7	11.6	mA
4	Terminal Resistance	R	0.4	0.5	1.1	1.6	2.1	4.0	Ω
5	Output Power	$P_{2max.}$	4.7	9.6	5.9	7.9	9.4	6.3	W
6	Stall Torque	mNm	37.59 (5.33)	77.71 (11.01)	51.68 (7.32)	68.82 (9.75)	79.56 (11.27)	56.48 (8)	mNm (oz-in)
7	Efficiency	$h_{max.}$	85	90	87	89	90	88	%
8	Max Continuous Speed	$n_{e\ max.}$	10000	10000	10000	10000	10000	10000	rpm
9	Max Continuous Torque	$M_{e\ max.}$	11.04 (1.57)	12.81 (1.82)	12.57 (1.79)	13.25 (1.88)	13.28 (1.89)	12.98 (1.84)	mNm (oz-in)
10	Max Continuous Current	$I_{e\ max.}$	2.19	1.95	1.32	1.11	0.96	0.70	A
11	Back-EMF Constant	k_E	0.54	0.70	1.01	1.27	1.47	1.98	mV/rpm
12	Torque Constant	k_M	5.16	6.70	9.69	12.12	14.05	18.90	mNm/A
13	Motor Regulation	R/k^2	15.00	11.49	11.93	10.76	10.70	11.20	10^3/Nms
14	Friction Torque	T_F	0.22 (0.04)	0.22 (0.04)	0.22 (0.04)	0.22 (0.04)	0.22 (0.04)	0.22 (0.04)	mNm (oz-in)
15	Mechanical Time Constant	τ_m	7.54	7.25	7.27	7.07	6.95	6.79	ms
16	Rotor Inertia	J	4.90	6.32	6.09	6.57	6.49	6.06	g-cm²

General Data				
17	Thermal Resistance (rotor/body)	R_{th1}/R_{th2}	6/22	°C/W
18	Thermal Time Constant (rotor/stator)	t_{W1}/t_{W2}	9/550	S
19	Operating Temperature Range:	motor rotor	-30°C to 85°C (-22°F to 185°F) 100°C (212°F)	°C (°F) °C (°F)
20	Shaft Load Max.: (5 mm. from bearing)	 -radial -axial	With sleeve bearings 3 (10.79) 100 (359.6)	 N (oz) N (oz)
21	Shaft Play:	-radial -axial	0.03 (0.0012) 0.15 (0.0059)	mm (inch) mm (inch)
22	Weight	g	65 (2.3)	g (oz)
23	Commutation Segment	-	9	segment

*Also available with ball bearing

Execution Table

Gearbox	Single Shaft	MR2	E9
R22	4	5	6
K24	7	8	9
K27	1	2	3
R22HT	20	21	22

Note:
P1: standard commutation
P2: special commutation for double shaft version

▶ Motor shaft rotates CW when seen from motor front face when +ve and -ve supply is given to respective terminals.

No Load Speed vs. Torque

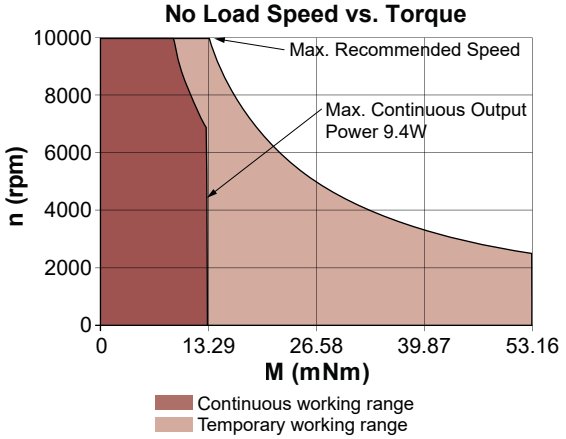

22DCT Athlonix™

Ø 22 mm • Precious metal commutation • 13.28 mNm

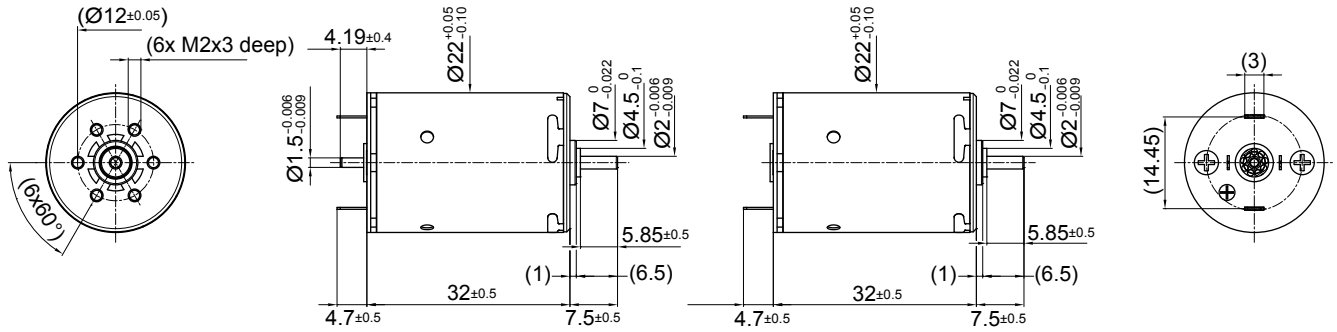

22DCT 32P2 •••• .2

22DCT 32P2 •••• .14

Dimensions in mm.

Electrical Data	Symbol	22DCT 32P2 •••• .*					Unit
		216E	215E	212E	211E	209E	
1 Nominal Voltage	V	18	24	24	36	48	Volt
2 No-Load Speed	n_0	6666	8569	5600	7437	6493	rpm
3 No-Load Current	I_0	8.6	8.3	5.4	4.8	3.1	mA
4 Terminal Resistance	R	8.4	9.9	23.4	30.4	71.7	Ω
5 Output Power	$P_{2max.}$	6.6	8.6	4.9	7.0	5.9	W
6 Stall Torque	mNm	54.94 (7.79)	64.54 (9.15)	41.47 (5.88)	54.31 (7.7)	46.82 (6.64)	mNm (oz-in)
7 Efficiency	$h_{max.}$	88	89	86	88	87	%
8 Max Continuous Speed	$n_{e\ max.}$	10000	10000	10000	10000	10000	rpm
9 Max Continuous Torque	$M_{e\ max.}$	12.17 (1.73)	11.63 (1.65)	11.53 (1.64)	11.44 (1.63)	11.37 (1.62)	mNm (oz-in)
10 Max Continuous Current	$I_{e\ max.}$	0.48	0.44	0.29	0.25	0.17	A
11 Back-EMF Constant	k_E	2.69	2.79	4.26	4.82	7.36	mV/rpm
12 Torque Constant	k_M	25.68	26.65	40.71	46.04	70.27	mNm/A
13 Motor Regulation	R/k^2	12.70	13.90	14.14	14.34	14.52	10^3/Nms
14 Friction Torque	T_F	0.22 (0.04)	0.22 (0.04)	0.22 (0.04)	0.22 (0.04)	0.22 (0.04)	mNm (oz-in)
15 Mechanical Time Constant	τ_m	6.70	6.69	6.65	6.64	6.63	ms
16 Rotor Inertia	J	5.27	4.81	4.70	4.63	4.56	g-cm²

General Data			
17 Thermal Resistance (rotor/body)	R_{th1}/R_{th2}	6/22	°C/W
18 Thermal Time Constant (rotor/stator)	t_{W1}/t_{W2}	9/550	S
19 Operating Temperature Range:	motor	-30°C to 85°C (-22°F to 185°F)	°C (°F)
	rotor	100°C (212°F)	°C (°F)
20 Shaft Load Max.:		With sleeve bearings	
(5 mm. from bearing)	-radial	3 (10.79)	N (oz)
	-axial	100 (359.6)	N (oz)
21 Shaft Play:	-radial	0.03 (0.0012)	mm (inch)
	-axial	0.15 (0.0059)	mm (inch)
22 Weight	g	65 (2.3)	g (oz)
23 Commutation Segment	-	9	segment

*Also available with ball bearing

Execution Table

Gearbox	Single Shaft	MR2	E9
R22	4	5	6
K24	7	8	9
K27	1	2	3
R22HT	20	21	22

Note:
P1: standard commutation
P2: special commutation for double shaft version

▶ Motor shaft rotates CW when seen from motor front face when +ve and -ve supply is given to respective terminals.

No Load Speed vs. Torque

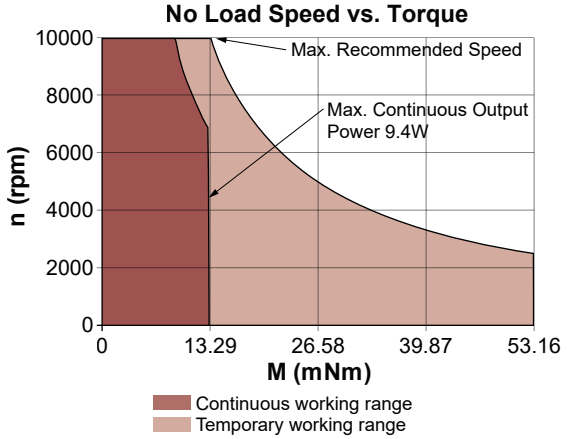

V092020 • © 2020 Portescap. Specifications subject to change without notice.

22DCT Athlonix™

Ø 22 mm • Graphite-Copper commutation • 12.74 mNm

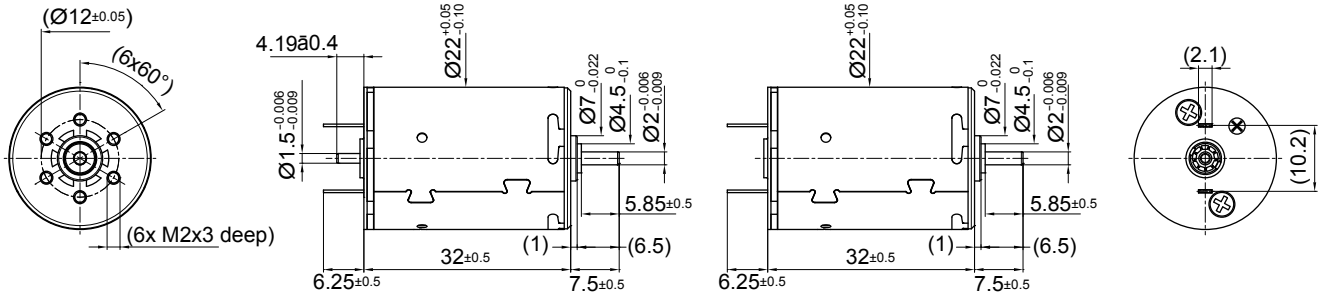

22DCT 32G2 •••• .2

22DCT 32G2 •••• .1

Dimensions in mm.

Electrical Data	Symbol	22DCT 32G2 •••• .* 135P	225P	228E	226E	224E	220E	Unit
1 Nominal Voltage	V	3	6	6	9	12	12	Volt
2 No-Load Speed	n_0	5475	8490	5856	7045	8106	6014	rpm
3 No-Load Current	I_0	87.3	67.1	46.4	37.1	32.0	23.8	mA
4 Terminal Resistance	R	0.5	0.6	1.2	1.7	2.2	4.1	Ω
5 Output Power	$P_{2max.}$	3.9	8.4	5.4	7.5	9.0	6.1	W
6 Stall Torque	mNm	29.93 (4.24)	64.83 (9.19)	47.2 (6.69)	64.48 (9.14)	75.72 (10.73)	54.86 (7.77)	mNm (oz-in)
7 Efficiency	$h_{max.}$	77	84	82	84	85	83	%
8 Max Continuous Speed	$n_{e\ max.}$	10000	10000	10000	10000	10000	10000	rpm
9 Max Continuous Torque	$M_{e\ max.}$	9.65 (1.37)	11.48 (1.63)	11.8 (1.68)	12.61 (1.79)	12.74 (1.81)	12.59 (1.79)	mNm (oz-in)
10 Max Continuous Current	$I_{e\ max.}$	1.96	1.78	1.26	1.08	0.94	0.69	A
11 Back-EMF Constant	k_E	0.54	0.70	1.01	1.27	1.47	1.98	mV/rpm
12 Torque Constant	k_M	5.16	6.70	9.69	12.12	14.05	18.90	mNm/A
13 Motor Regulation	R/k^2	19.00	13.71	12.99	11.44	11.21	11.48	10^3/Nms
14 Friction Torque	T_F	0.45 (0.07)	0.45 (0.07)	0.45 (0.07)	0.45 (0.07)	0.45 (0.07)	0.45 (0.07)	mNm (oz-in)
15 Mechanical Time Constant	τ_m	9.38	8.66	7.92	7.51	7.28	6.96	ms
16 Rotor Inertia	J	4.90	6.32	6.09	6.57	6.49	6.06	g-cm²

General Data			
17 Thermal Resistance (rotor/body)	R_{th1}/R_{th2}	6/22	°C/W
18 Thermal Time Constant (rotor/stator)	t_{W1}/t_{W2}	9/550	S
19 Operating Temperature Range:	motor	-30°C to 85°C (-22°F to 185°F)	°C (°F)
	rotor	100°C (212°F)	°C (°F)
20 Shaft Load Max.:		With sleeve bearings	
(5 mm. from bearing)	-radial	3 (10.79)	N (oz)
	-axial	100 (359.6)	N (oz)
21 Shaft Play:	-radial	0.03 (0.0012)	mm (inch)
	-axial	0.15 (0.0059)	mm (inch)
22 Weight	g	65 (2.3)	g (oz)
23 Commutation Segment	-	9	segment

*Also available with ball bearing

Execution Table

Gearbox	Single Shaft	MR2	E9
R22	4	5	6
K24	7	8	9
K27	1	2	3
R22HT	20	21	22

Note:
G1: standard commutation
G2: special commutation for double shaft version

No Load Speed vs. Torque

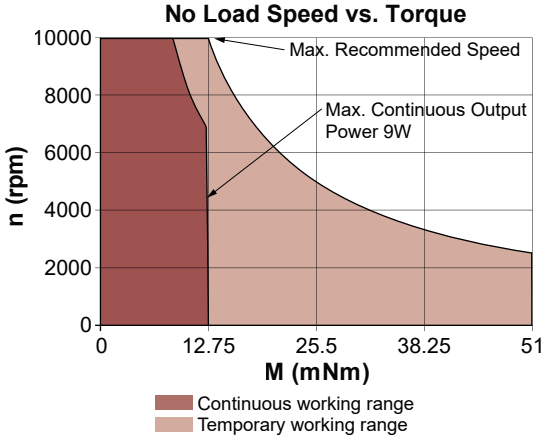

▶ Motor shaft rotates CW when seen from motor front face when +ve and -ve supply is given to respective terminals.

22DCT Athlonix™

Ø 22 mm • Graphite-Copper commutation • 12.74 mNm

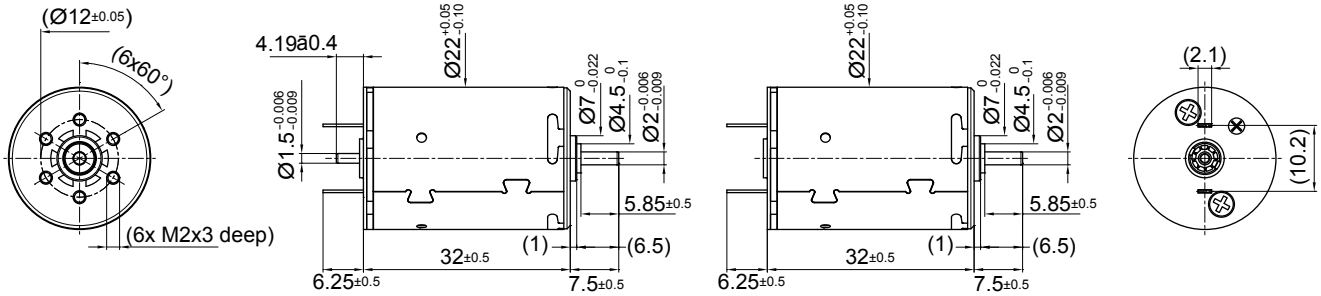

22DCT 32G2 •••• .2 **22DCT 32G2 •••• .1**

Dimensions in mm.

Electrical Data	Symbol	22DCT 32G2 •••• .*					Unit
		216E	215E	212E	211E	209E	
1 Nominal Voltage	V	18	24	24	36	48	Volt
2 No-Load Speed	n_0	6637	8538	5569	7405	6461	rpm
3 No-Load Current	I_0	17.5	16.9	11.1	9.8	6.4	mA
4 Terminal Resistance	R	8.5	10.0	23.5	30.5	71.8	Ω
5 Output Power	$P_{2max.}$	6.4	8.3	4.8	6.9	5.7	W
6 Stall Torque	mNm	54.06 (7.66)	63.66 (9.02)	41.06 (5.82)	53.9 (7.64)	46.52 (6.59)	mNm (oz-in)
7 Efficiency	$h_{max.}$	83	84	80	83	81	%
8 Max Continuous Speed	$n_{e\ max.}$	10000	10000	10000	10000	10000	rpm
9 Max Continuous Torque	$M_{e\ max.}$	11.87 (1.69)	11.34 (1.61)	11.27 (1.6)	11.19 (1.59)	11.13 (1.58)	mNm (oz-in)
10 Max Continuous Current	$I_{e\ max.}$	0.48	0.44	0.29	0.25	0.16	A
11 Back-EMF Constant	k_E	2.69	2.79	4.26	4.82	7.36	mV/rpm
12 Torque Constant	k_M	25.68	26.65	40.71	46.04	70.27	mNm/A
13 Motor Regulation	R/k^2	12.86	14.04	14.20	14.39	14.54	10^3/Nms
14 Friction Torque	T_F	0.45 (0.07)	0.45 (0.07)	0.45 (0.07)	0.45 (0.07)	0.45 (0.07)	mNm (oz-in)
15 Mechanical Time Constant	τ_m	6.78	6.75	6.68	6.66	6.64	ms
16 Rotor Inertia	J	5.27	4.81	4.70	4.63	4.56	g-cm²

General Data			
17 Thermal Resistance (rotor/body)	R_{th1}/R_{th2}	6/22	°C/W
18 Thermal Time Constant (rotor/stator)	t_{W1}/t_{W2}	9/550	S
19 Operating Temperature Range:	motor rotor	-30°C to 85°C (-22°F to 185°F) 100°C (212°F)	°C (°F) °C (°F)
20 Shaft Load Max.: (5 mm. from bearing)	 -radial -axial	With sleeve bearings 3 (10.79) 100 (359.6)	 N (oz) N (oz)
21 Shaft Play:	-radial -axial	0.03 (0.0012) 0.15 (0.0059)	mm (inch) mm (inch)
22 Weight	g	65 (2.3)	g (oz)
23 Commutation Segment	-	9	segment

*Also available with ball bearing

Execution Table

Gearbox	Single Shaft	MR2	E9
R22	4	5	6
K24	7	8	9
K27	1	2	3
R22HT	20	21	22

Note:
G1: standard commutation
G2: special commutation for double shaft version

▶ Motor shaft rotates CW when seen from motor front face when +ve and -ve supply is given to respective terminals.

No Load Speed vs. Torque

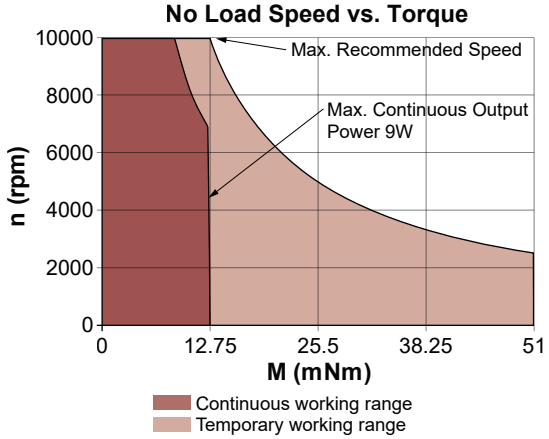

V092020 • © 2020 Portescap. Specifications subject to change without notice.

22N78 Athlonix™

Ø 22 mm • Precious metal commutation • 15.7 mNm

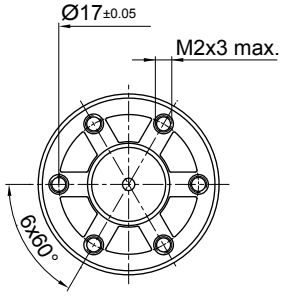

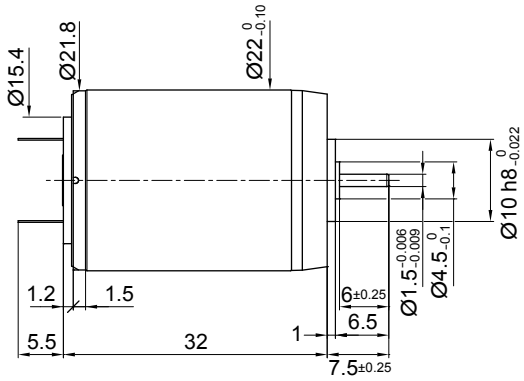

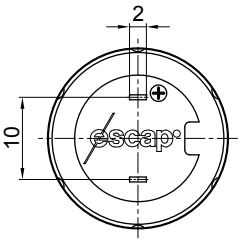

Dimensions in mm.

Electrical Data	Symbol	22N78 •••• .1001 319P	313P	311P	216E	215E	208E	Unit
1 Nominal Voltage	V	6	9	12	18	24	48	Volt
2 No-Load Speed	n_0	8,660	6,860	7,280	8,250	9,075	6,350	rpm
3 No-Load Current	I_0	28.0	20.0	11.0	6.0	5.0	1.5	mA
4 Terminal Resistance	R	0.6	2.5	3.9	7.7	11.0	107.0	Ω
5 Output Power	$P_{2max.}$	13.0	12.0	12.0	11.3	11.5	10.0	W
6 Stall Torque	mNm	66 (9.35)	45 (6.38)	48 (6.8)	49 (6.94)	55 (7.79)	32 (4.54)	mNm (oz-in)
7 Efficiency	$h_{max.}$	90	90	88	90	91	91	%
8 Max Continuous Speed	$n_{e\ max.}$	10,000	10,000	10,000	10,000	10,000	10,000	rpm
9 Max Continuous Torque	$M_{e\ max.}$	15.7 (2.06)	14.5 (2.06)	14.8 (2.1)	13.8 (1.96)	14.5 (2.06)	12.9 (1.83)	mNm (oz-in)
10 Max Continuous Current	$I_{e\ max.}$	2.40	1.18	0.95	0.67	0.58	0.18	A
11 Back-EMF Constant	k_E	0.69	1.31	1.64	2.18	2.64	7.54	mV/rpm
12 Torque Constant	k_M	6.60	12.50	15.70	20.80	25.20	72.00	mNm/A
13 Motor Regulation	R/k^2	13.8	16.0	15.8	17.80	17.32	20.64	10^3/Nms
14 Friction Torque	T_F	0.07 (0.01)	0.25 (0.04)	0.11 (0.02)	0.12 (0.02)	0.12 (0.02)	0.07 (0.01)	mNm (oz-in)
15 Rotor Inductance	L	0.04	0.16	0.25	0.50	0.60	7.00	mH
16 Mechanical Time Constant	τ_m	6.7	7.0	6.6	8.4	7.8	6.9	ms
17 Rotor Inertia	J	4.90	4.39	4.20	4.74	4.50	3.32	g-cm²

General Data			
18 Thermal Resistance (rotor/body)	R_{th1}/R_{th2}	6/22	°C/W
19 Thermal Time Constant (rotor/stator)	t_{W1}/t_{W2}	9/550	S
20 Operating Temperature Range:	motor rotor	-30°C to 85°C (-22°F to 185°F) 100°C (212°F)	°C (°F) °C (°F)
21 Shaft Load Max.: (5 mm. from bearing)	 -radial -axial	With sleeve bearings 3.0 (10.8) 150 (539.5)	 N (oz) N (oz)
22 Shaft Play:	-radial -axial	<0.03 (0.0012) 0.15 (0.0059)	mm (inch) mm (inch)
23 Weight	g	53 (1.87)	g (oz)
24 Commutation Segment	-	9	segment

Execution Table

Gearbox	Single Shaft	MR2	E9
R22	1001	1008	1005
K24	1001	1008	1005
K27	1001	1008	1005
R22HT	1024	Upon Request	1025

No Load Speed vs. Torque

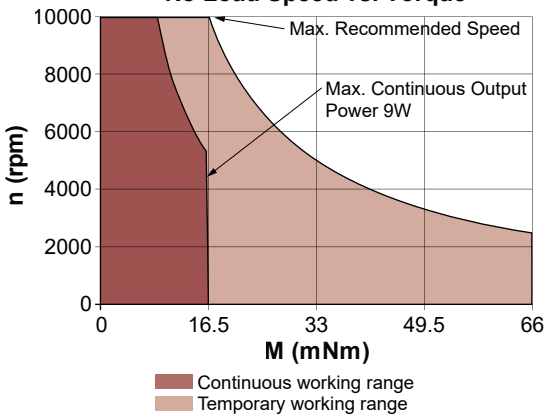

▶ Motor shaft rotates CW when seen from motor front face when +ve and -ve supply is given to respective terminals.

22S28

Ø 22 mm • Precious metal commutation • 4.1 mNm

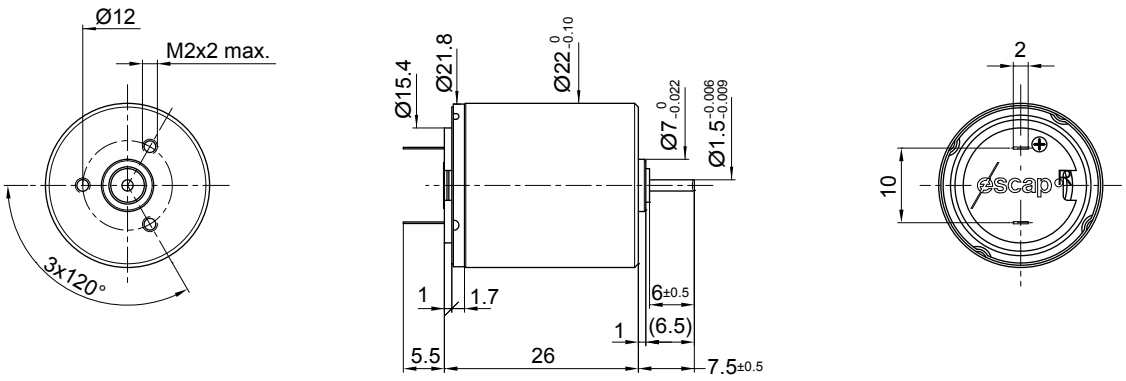

Dimensions in mm.

Electrical Data	Symbol	22S28 •••• .1 208E	22S28 •••• .1 205E	Unit
1 Nominal Voltage	V	15	24	Volt
2 No-Load Speed	n_0	9,600	7,940	rpm
3 No-Load Current	I_0	6.0	2.8	mA
4 Terminal Resistance	R	35.0	140.0	Ω
5 Output Power	$P_{2max.}$	2.5	2.4	W
6 Stall Torque	mNm	6.3 (0.9)	4.9 (0.7)	mNm (oz-in)
7 Efficiency	$h_{max.}$	78	76	%
8 Max Continuous Speed	$n_{e\ max.}$	10,000	10,000	rpm
9 Max Continuous Torque	$M_{e\ max.}$	4.1 (0.56)	3.9 (0.56)	mNm (oz-in)
10 Max Continuous Current	$I_{e\ max.}$	0.29	0.15	A
11 Back-EMF Constant	k_E	1.54	2.97	mV/rpm
12 Torque Constant	k_M	14.70	28.40	mNm/A
13 Motor Regulation	R/k^2	160.0	170.0	10^3/Nms
14 Friction Torque	T_F	0.09 (0.02)	0.08 (0.02)	mNm (oz-in)
15 Rotor Inductance	L	0.92	3.60	mH
16 Mechanical Time Constant	τ_m	25.6	25.5	ms
17 Rotor Inertia	J	1.60	1.50	g-cm²

General Data			
18 Thermal Resistance (rotor/body)	R_{th1}/R_{th2}	5/30	°C/W
19 Thermal Time Constant (rotor/stator)	t_{W1}/t_{W2}	5/480	S
20 Operating Temperature Range:	motor rotor	-30°C to 85°C (-22°F to 185°F) 100°C (212°F)	°C (°F) °C (°F)
21 Shaft Load Max.: (5 mm. from bearing)	 -radial -axial	With sleeve bearings 1.5 (5.4) 100 (359.6)	 N (oz) N (oz)
22 Shaft Play:	-radial -axial	<0.03 (0.0012) 0.15 (0.0059)	mm (inch) mm (inch)
23 Weight	g	49 (1.73)	g (oz)
24 Commutation Segment	-	9	segment

Execution Table

Gearbox	Single Shaft	MR2
R22	Upon Request	Upon Request
K24	Upon Request	Upon Request
K27	Upon Request	Upon Request

No Load Speed vs. Torque

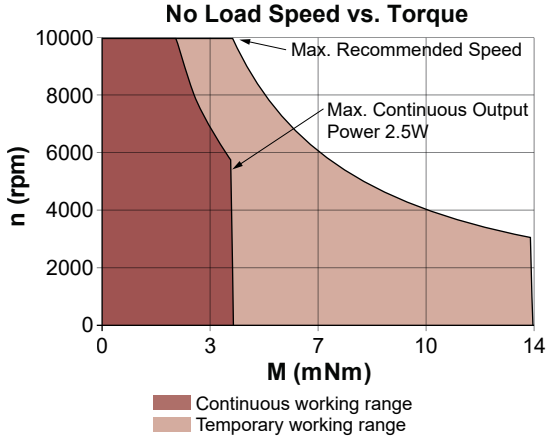

▶ Motor shaft rotates CW when seen from motor front face when +ve and -ve supply is given to respective terminals.

V092020 • © 2020 Portescap. Specifications subject to change without notice.

22S78

Ø 22 mm • Precious metal commutation • 8.9 mNm

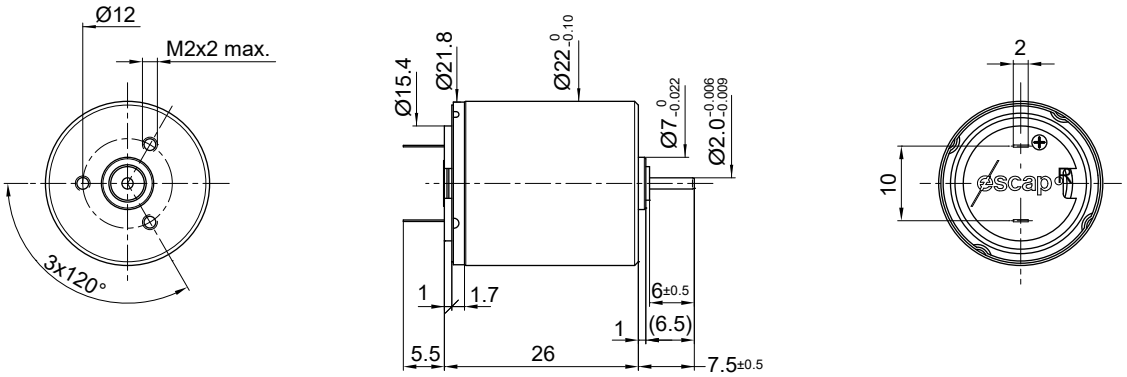

Dimensions in mm.

Electrical Data	Symbol	22S78 •••• .1 210E	22S78 •••• .1 208E	Unit
1 Nominal Voltage	V	18	24	Volt
2 No-Load Speed	n_0	7,780	8,550	rpm
3 No-Load Current	I_0	4.5	3.3	mA
4 Terminal Resistance	R	18.0	35.0	Ω
5 Output Power	$P_{2max.}$	5.5	4.6	W
6 Stall Torque	mNm	22 (3.12)	18.3 (2.6)	mNm (oz-in)
7 Efficiency	$h_{max.}$	87	87	%
8 Max Continuous Speed	$n_{e\ max.}$	10,000	10,000	rpm
9 Max Continuous Torque	$M_{e\ max.}$	8.9 (1.1)	7.7 (1.1)	mNm (oz-in)
10 Max Continuous Current	$I_{e\ max.}$	0.41	0.29	A
11 Back-EMF Constant	k_E	2.30	2.80	mV/rpm
12 Torque Constant	k_M	22.00	26.70	mNm/A
13 Motor Regulation	R/k^2	37.0	49.0	10^3/Nms
14 Friction Torque	T_F	0.09 (0.02)	0.09 (0.02)	mNm (oz-in)
15 Rotor Inductance	L	0.50	0.92	mH
16 Mechanical Time Constant	τ_m	7.0	7.8	ms
17 Rotor Inertia	J	1.90	1.60	g-cm²
General Data				
18 Thermal Resistance (rotor/body)	R_{th1}/R_{th2}	5/30		°C/W
19 Thermal Time Constant (rotor/stator)	t_{W1}/t_{W2}	5/480		S
20 Operating Temperature Range:	motor rotor	-30°C to 85°C (-22°F to 185°F) 100°C (212°F)		°C (°F) °C (°F)
21 Shaft Load Max.: (5 mm. from bearing)	 -radial -axial	With sleeve bearings 1.5 (5.4) 100 (359.6)		 N (oz) N (oz)
22 Shaft Play:	-radial -axial	<0.03 (0.0012) 0.15 (0.0059)		mm (inch) mm (inch)
23 Weight	g	49 (1.73)		g (oz)
24 Commutation Segment	-	9		segment

Execution Table

Gearbox	Single Shaft
R22	1

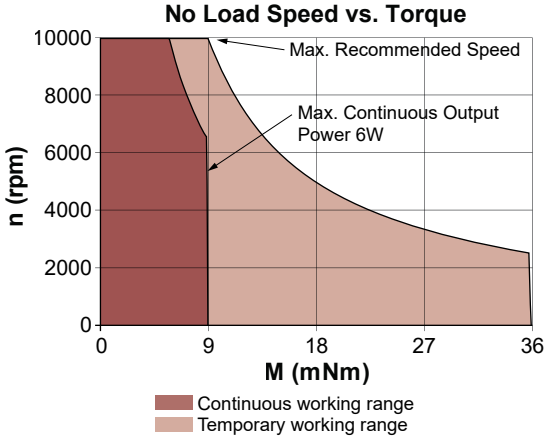

▶ Motor shaft rotates CW when seen from motor front face when +ve and -ve supply is given to respective terminals.

23GST2R82

Ø 23 mm • Graphite-Copper commutation • 22 mNm

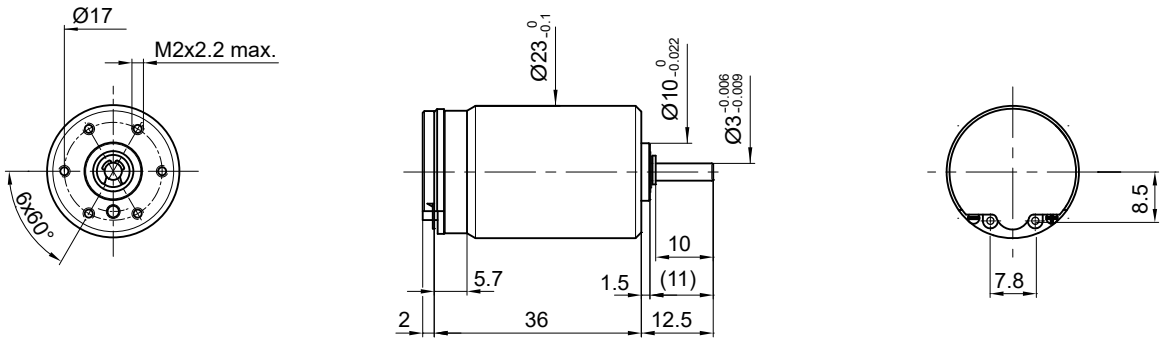

Dimensions in mm.

Electrical Data	Symbol	23GST2R82 •••• .1 216P	23GST2R82 •••• .1 216E	Unit
1 Nominal Voltage	V	12	24	Volt
2 No-Load Speed	n_0	8,690	9,010	rpm
3 No-Load Current	I_0	90.0	60.0	mA
4 Terminal Resistance	R	2.0	6.9	Ω
5 Output Power	$P_{2max.}$	17.2	18.0	W
6 Stall Torque	mNm	80 (11.33)	87 (12.33)	mNm (oz-in)
7 Efficiency	$h_{max.}$	77	76	%
8 Max Continuous Speed	$n_{e\ max.}$	10,000	10,000	rpm
9 Max Continuous Torque	$M_{e\ max.}$	21 (3.12)	22 (3.12)	mNm (oz-in)
10 Max Continuous Current	$I_{e\ max.}$	1.70	0.90	A
11 Back-EMF Constant	k_E	1.36	2.62	mV/rpm
12 Torque Constant	k_M	13.00	25.00	mNm/A
13 Motor Regulation	R/k^2	12.0	11.0	10^3/Nms
14 Friction Torque	T_F	1.17 (0.17)	1.5 (0.22)	mNm (oz-in)
15 Rotor Inductance	L	0.08	0.30	mH
16 Mechanical Time Constant	τ_m	5.6	5.2	ms
17 Rotor Inertia	J	4.70	4.70	g-cm²
General Data				
18 Thermal Resistance (rotor/body)	R_{th1}/R_{th2}	7/16		°C/W
19 Thermal Time Constant (rotor/stator)	t_{W1}/t_{W2}	12/460		S
20 Operating Temperature Range:	motor rotor	-30°C to 85°C (-22°F to 185°F) 100°C (212°F)		°C (°F) °C (°F)
21 Shaft Load Max.: (5 mm. from bearing)	 -radial -axial	With ball bearings 6.0 (21.6) 250 (899.2)		 N (oz) N (oz)
22 Shaft Play:	-radial -axial	<0.03 (0.0012) 0.15 (0.0059)		mm (inch) mm (inch)
23 Weight	g	80 (2.83)		g (oz)
24 Commutation Segment	-	9		segment

Execution Table

Gearbox	Single Shaft	MR2	E9
R22	2	Upon Request	Upon Request
K27	2	Upon Request	Upon Request
R22HT	11	12	Upon Request

No Load Speed vs. Torque

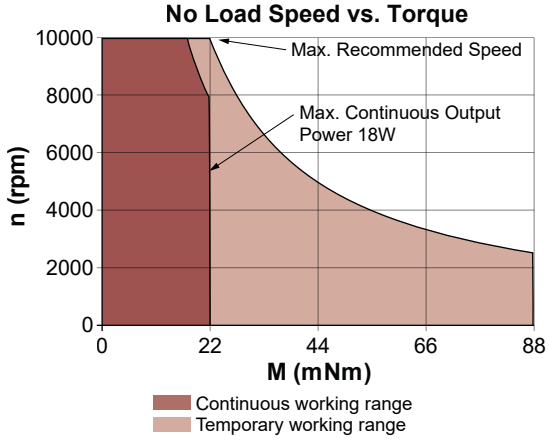

▶ Motor shaft rotates CW when seen from motor front face when +ve and -ve supply is given to respective terminals.

V092020 • © 2020 Portescap. Specifications subject to change without notice.

24DCT Athlonix™

Ø 24 mm • Precious metal commutation • 14.97 mNm

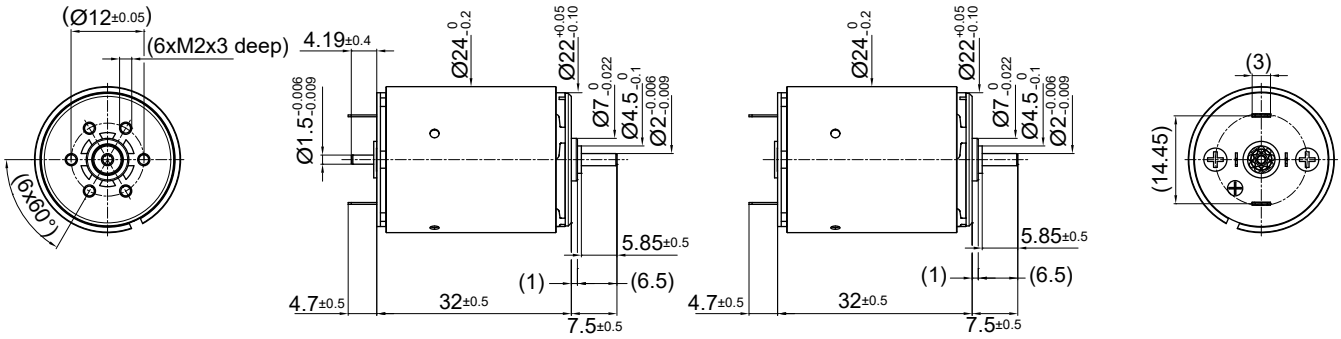

24DCT 32P2 •••• .2 **24DCT 32P2 •••• .14**

Dimensions in mm.

Electrical Data	Symbol	24DCT 32P2 •••• .*						Unit
		226P	221P	216P	215P	213P	212P	
1 Nominal Voltage	V	3	6	9	12	15	18	Volt
2 No-Load Speed	n_0	5718	7365	6444	7641	7368	7370	rpm
3 No-Load Current	I_0	44.1	28.4	16.6	14.7	11.4	8.6	mA
4 Terminal Resistance	R	0.4	0.7	2.0	2.5	4.1	5.9	Ω
5 Output Power	$P_{2max.}$	5.3	8.5	7.5	9.4	9.1	9.1	W
6 Stall Torque	mNm	40.6 (5.75)	63.07 (8.94)	60.34 (8.55)	71.54 (10.14)	70.38 (9.97)	70.35 (9.97)	mNm (oz-in)
7 Efficiency	$h_{max.}$	86	89	88	89	89	90	%
8 Max Continuous Speed	$n_{e\ max.}$	10000	10000	10000	10000	10000	10000	rpm
9 Max Continuous Torque	$M_{e\ max.}$	12.86 (1.83)	14.15 (2.01)	14.81 (2.1)	14.81 (2.1)	14.96 (2.12)	14.97 (2.13)	mNm (oz-in)
10 Max Continuous Current	$I_{e\ max.}$	2.62	1.85	1.13	1.00	0.78	0.65	A
11 Back-EMF Constant	k_E	0.52	0.81	1.39	1.57	2.03	2.44	mV/rpm
12 Torque Constant	k_M	4.98	7.75	13.29	14.95	19.38	23.26	mNm/A
13 Motor Regulation	R/k^2	14.75	12.23	11.18	11.18	10.96	10.97	10^3/Nms
14 Friction Torque	T_F	0.22 (0.04)	0.22 (0.04)	0.22 (0.04)	0.22 (0.04)	0.22 (0.04)	0.22 (0.04)	mNm (oz-in)
15 Mechanical Time Constant	τ_m	6.97	5.87	5.34	5.28	5.20	5.16	ms
16 Rotor Inertia	J	4.73	4.80	4.78	4.72	4.74	4.70	g-cm²

General Data			
17 Thermal Resistance (rotor/body)	R_{th1}/R_{th2}	6/22	°C/W
18 Thermal Time Constant (rotor/stator)	t_{W1}/t_{W2}	9/550	S
19 Operating Temperature Range:	motor	-30°C to 85°C (-22°F to 185°F)	°C (°F)
	rotor	100°C (212°F)	°C (°F)
20 Shaft Load Max.:		With sleeve bearings	
(5 mm. from bearing)	-radial	3 (10.79)	N (oz)
	-axial	100 (359.6)	N (oz)
21 Shaft Play:	-radial	0.03 (0.0012)	mm (inch)
	-axial	0.15 (0.0059)	mm (inch)
22 Weight	g	72 (2.54)	g (oz)
23 Commutation Segment	-	9	segment

*Also available with ball bearing

Execution Table

Gearbox	Single Shaft	MR2	E9
R22	4	5	6
K24	7	8	9
K27	1	2	3
R22HT	11	Upon Request	Upon Request

Note:
P1: standard commutation
P2: special commutation for double shaft version

No Load Speed vs. Torque

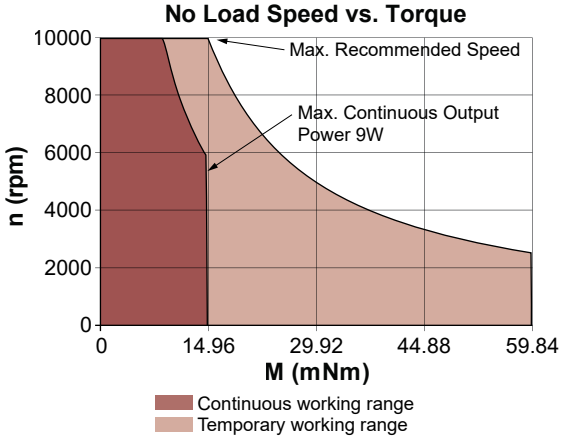

▶ Motor shaft rotates CW when seen from motor front face when +ve and -ve supply is given to respective terminals.

24DCT Athlonix™

Ø 24 mm • Precious metal commutation • 14.97 mNm

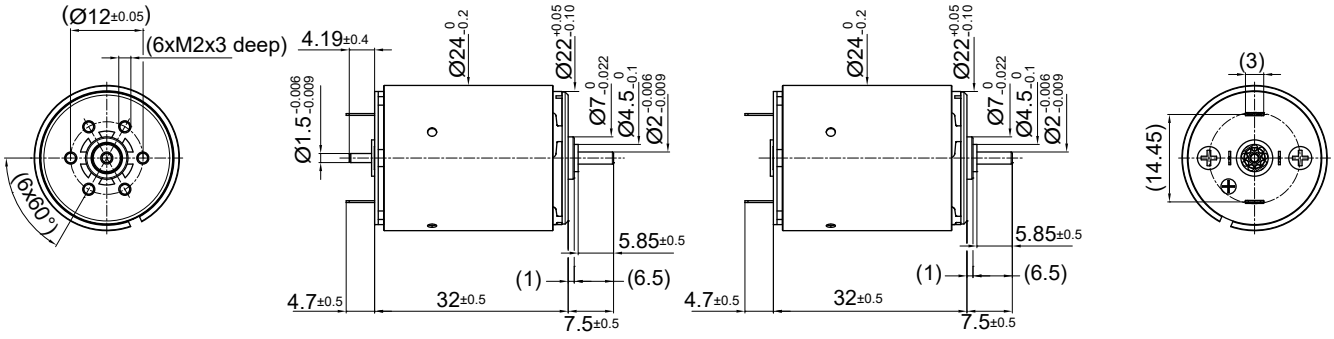

24DCT 32P2 •••• .2 — 24DCT 32P2 •••• .14

Dimensions in mm.

Electrical Data	Symbol	24DCT 32P2 •••• .* 215E	214E	213E	212E	210E	Unit
1 Nominal Voltage	V	21	24	30	36	48	Volt
2 No-Load Speed	n_0	6980	7076	7837	7837	7631	rpm
3 No-Load Current	I_0	7.7	6.8	6.0	5.0	3.7	mA
4 Terminal Resistance	R	9.9	12.8	16.2	23.4	46.1	Ω
5 Output Power	$P_{2max.}$	8.0	8.0	9.2	9.2	8.6	W
6 Stall Torque	mNm	60.64 (8.59)	60.51 (8.57)	67.38 (9.55)	66.95 (9.49)	62.1 (8.8)	mNm (oz-in)
7 Efficiency	$h_{max.}$	88	88	89	89	88	%
8 Max Continuous Speed	$n_{e\ max.}$	10000	10000	10000	10000	10000	rpm
9 Max Continuous Torque	$M_{e\ max.}$	14.25 (2.02)	14.14 (2.01)	14.18 (2.01)	14.13 (2.01)	13.79 (1.96)	mNm (oz-in)
10 Max Continuous Current	$I_{e\ max.}$	0.50	0.44	0.39	0.32	0.23	A
11 Back-EMF Constant	k_E	3.00	3.38	3.82	4.58	6.27	mV/rpm
12 Torque Constant	k_M	28.63	32.27	36.44	43.72	59.86	mNm/A
13 Motor Regulation	R/k^2	12.05	12.24	12.18	12.26	12.87	10^3/Nms
14 Friction Torque	T_F	0.22 (0.04)	0.22 (0.04)	0.22 (0.04)	0.22 (0.04)	0.22 (0.04)	mNm (oz-in)
15 Mechanical Time Constant	τ_m	5.80	5.78	5.77	5.76	5.75	ms
16 Rotor Inertia	J	4.81	4.72	4.74	4.70	4.47	g-cm²

General Data			
17 Thermal Resistance (rotor/body)	R_{th1}/R_{th2}	6/22	°C/W
18 Thermal Time Constant (rotor/stator)	t_{W1}/t_{W2}	9/550	S
19 Operating Temperature Range:	motor	-30°C to 85°C (-22°F to 185°F)	°C (°F)
	rotor	100°C (212°F)	°C (°F)
20 Shaft Load Max.:		With sleeve bearings	
(5 mm. from bearing)	-radial	3 (10.79)	N (oz)
	-axial	100 (359.6)	N (oz)
21 Shaft Play:	-radial	0.03 (0.0012)	mm (inch)
	-axial	0.15 (0.0059)	mm (inch)
22 Weight	g	72 (2.54)	g (oz)
23 Commutation Segment	-	9	segment

*Also available with ball bearing

Execution Table

Gearbox	Single Shaft	MR2	E9
R22	4	5	6
K24	7	8	9
K27	1	2	3
R22HT	11	Upon Request	Upon Request

Note:
P1: standard commutation
P2: special commutation for double shaft version

▶ Motor shaft rotates CW when seen from motor front face when +ve and -ve supply is given to respective terminals.

No Load Speed vs. Torque

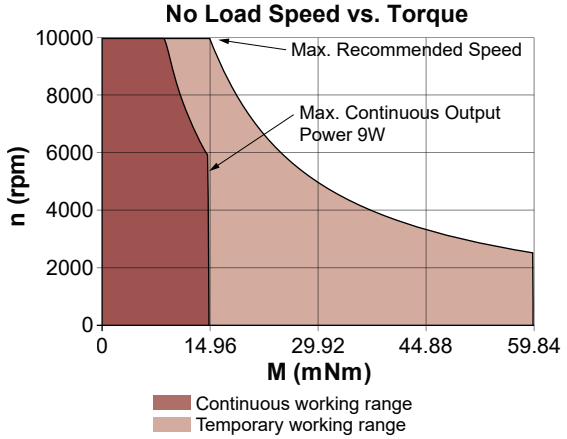

V092020 • © 2020 Portescap. Specifications subject to change without notice.

24DCT Athlonix™

Ø 24 mm • Graphite-Copper commutation • 14.47 mNm

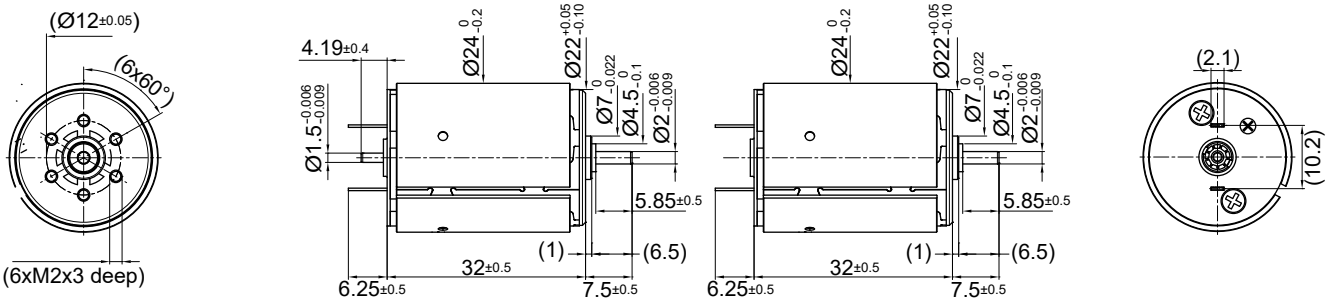

24DCT 32G2 •••• .2 **24DCT 32G2 •••• .1**

Dimensions in mm.

Electrical Data	Symbol	24DCT 32G2 •••• .* 226P	221P	216P	215P	213P	212P	Unit
1 Nominal Voltage	V	3	6	9	12	15	18	Volt
2 No-Load Speed	n_0	5651	7324	6414	7613	7342	7342	rpm
3 No-Load Current	I_0	90.3	58.0	33.9	30.1	23.2	19.3	mA
4 Terminal Resistance	R	0.6	0.9	2.2	2.7	4.3	6.1	Ω
5 Output Power	$P_{2max.}$	3.6	7.1	6.9	8.8	8.7	8.8	W
6 Stall Torque	mNm	25.95 (3.68)	49.3 (6.99)	54.54 (7.73)	66 (9.35)	66.88 (9.48)	67.8 (9.61)	mNm (oz-in)
7 Efficiency	$h_{max.}$	76	82	83	84	84	84	%
8 Max Continuous Speed	$n_{e\ max.}$	10000	10000	10000	10000	10000	10000	rpm
9 Max Continuous Torque	$M_{e\ max.}$	10.07 (1.43)	12.29 (1.75)	13.87 (1.97)	14.01 (1.99)	14.37 (2.04)	14.47 (2.05)	mNm (oz-in)
10 Max Continuous Current	$I_{e\ max.}$	2.11	1.64	1.07	0.96	0.76	0.64	A
11 Back-EMF Constant	k_E	0.52	0.81	1.39	1.57	2.03	2.44	mV/rpm
12 Torque Constant	k_M	4.98	7.75	13.29	14.95	19.38	23.26	mNm/A
13 Motor Regulation	R/k^2	22.80	15.56	12.31	12.08	11.49	11.34	10^3/Nms
14 Friction Torque	T_F	0.45 (0.07)	0.45 (0.07)	0.45 (0.07)	0.45 (0.07)	0.45 (0.07)	0.45 (0.07)	mNm (oz-in)
15 Mechanical Time Constant	τ_m	10.78	7.47	5.88	5.70	5.45	5.33	ms
16 Rotor Inertia	J	4.73	4.80	4.78	4.72	4.74	4.70	g-cm²

General Data			
17 Thermal Resistance (rotor/body)	R_{th1}/R_{th2}	6/22	°C/W
18 Thermal Time Constant (rotor/stator)	t_{W1}/t_{W2}	9/550	S
19 Operating Temperature Range:	motor rotor	-30°C to 85°C (-22°F to 185°F) 100°C (212°F)	°C (°F) °C (°F)
20 Shaft Load Max.: (5 mm. from bearing)	 -radial -axial	With sleeve bearings 3 (10.79) 100 (359.6)	 N (oz) N (oz)
21 Shaft Play:	-radial -axial	0.03 (0.0012) 0.15 (0.0059)	mm (inch) mm (inch)
22 Weight	g	72 (2.54)	g (oz)
23 Commutation Segment	-	9	segment

*Also available with ball bearing

Execution Table

Gearbox	Single Shaft	MR2	E9
R22	4	5	6
K24	7	8	9
K27	1	2	3
R22HT	11	Upon Request	Upon Request

Note:
G1: standard commutation
G2: special commutation for double shaft version

▶ Motor shaft rotates CW when seen from motor front face when +ve and -ve supply is given to respective terminals.

No Load Speed vs. Torque

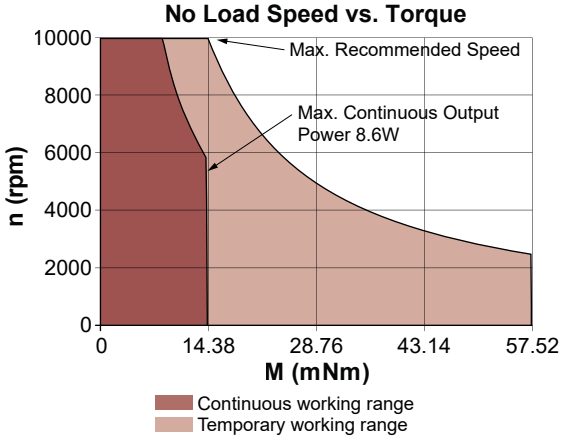

24DCT Athlonix™

Ø 24 mm • Graphite-Copper commutation • 14.47 mNm

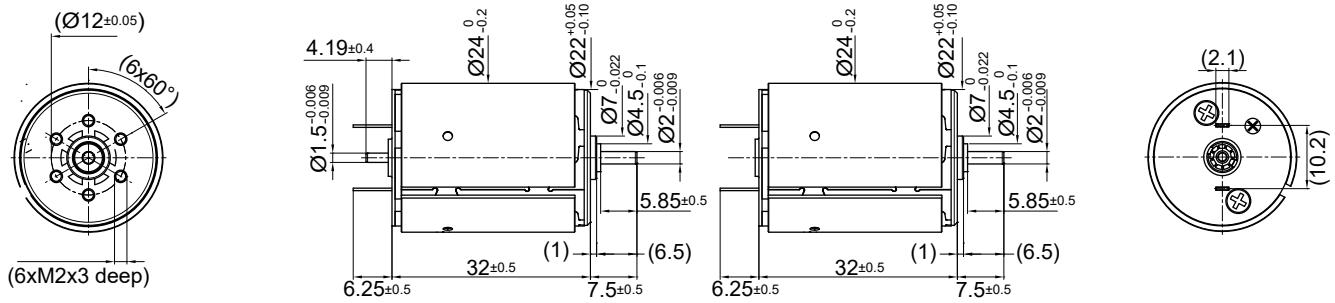

24DCT 32G2 •••• .2 **24DCT 32G2 •••• .1**

Dimensions in mm.

Electrical Data	Symbol	24DCT 32G2 •••• .* 215E	214E	213E	212E	210E	Unit
1 Nominal Voltage	V	21	24	30	36	48	Volt
2 No-Load Speed	n_0	6952	7048	7810	7810	7602	rpm
3 No-Load Current	I_0	15.7	13.9	12.4	10.3	7.5	mA
4 Terminal Resistance	R	10.1	13.0	16.4	23.6	46.3	Ω
5 Output Power	$P_{2max.}$	7.7	7.8	9.0	9.0	8.4	W
6 Stall Torque	mNm	59.2 (8.39)	59.34 (8.41)	66.32 (9.4)	66.15 (9.37)	61.6 (8.73)	mNm (oz-in)
7 Efficiency	$h_{max.}$	83	83	84	84	84	%
8 Max Continuous Speed	$n_{e\ max.}$	10000	10000	10000	10000	10000	rpm
9 Max Continuous Torque	$M_{e\ max.}$	13.88 (1.97)	13.8 (1.96)	13.86 (1.97)	13.84 (1.97)	13.53 (1.92)	mNm (oz-in)
10 Max Continuous Current	$I_{e\ max.}$	0.50	0.44	0.39	0.32	0.23	A
11 Back-EMF Constant	k_E	3.00	3.38	3.82	4.58	6.27	mV/rpm
12 Torque Constant	k_M	28.63	32.27	36.44	43.72	59.86	mNm/A
13 Motor Regulation	R/k^2	12.30	12.44	12.33	12.36	12.92	10^3/Nms
14 Friction Torque	T_F	0.45 (0.07)	0.45 (0.07)	0.45 (0.07)	0.45 (0.07)	0.45 (0.07)	mNm (oz-in)
15 Mechanical Time Constant	τ_m	5.91	5.87	5.84	5.81	5.77	ms
16 Rotor Inertia	J	4.81	4.72	4.74	4.70	4.47	g-cm²

General Data			
17 Thermal Resistance (rotor/body)	R_{th1}/R_{th2}	6/22	°C/W
18 Thermal Time Constant (rotor/stator)	t_{W1}/t_{W2}	9/550	S
19 Operating Temperature Range:	motor	-30°C to 85°C (-22°F to 185°F)	°C (°F)
	rotor	100°C (212°F)	°C (°F)
20 Shaft Load Max.:		With sleeve bearings	
(5 mm. from bearing)	-radial	3 (10.79)	N (oz)
	-axial	100 (359.6)	N (oz)
21 Shaft Play:	-radial	0.03 (0.0012)	mm (inch)
	-axial	0.15 (0.0059)	mm (inch)
22 Weight	g	72 (2.54)	g (oz)
23 Commutation Segment	-	9	segment

*Also available with ball bearing

Execution Table

Gearbox	Single Shaft	MR2	E9
R22	4	5	6
K24	7	8	9
K27	1	2	3
R22HT	11	Upon Request	Upon Request

Note:
G1: standard commutation
G2: special commutation for double shaft version

▶ Motor shaft rotates CW when seen from motor front face when +ve and -ve supply is given to respective terminals.

No Load Speed vs. Torque

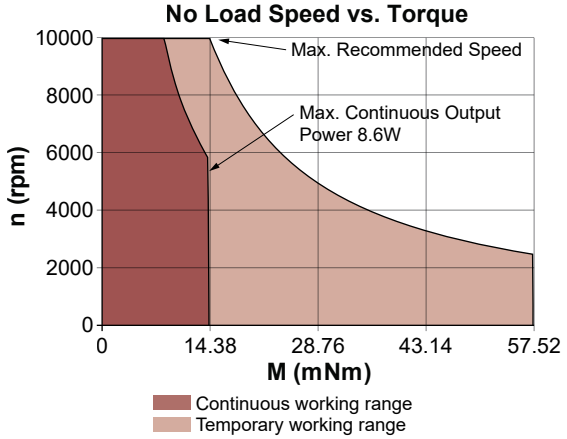

V092020 • © 2020 Portescap. Specifications subject to change without notice.

25GST2R82

Ø 25 mm • Graphite-Copper commutation • 33 mNm

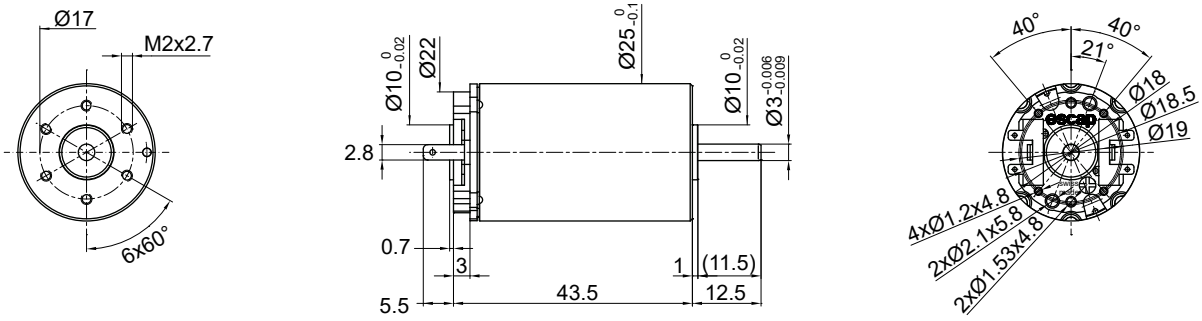

Dimensions in mm.

Electrical Data	Symbol	25GST2R82 •••• .1 228E	230E	216P	216E	Unit
1 Nominal Voltage	V	18	18	24	35	Volt
2 No-Load Speed	n_0	11,125	11,450	10,320	7,850	rpm
3 No-Load Current	I_0	110.0	110.0	70.0	40.0	mA
4 Terminal Resistance	R	1.6	1.3	3.3	12.5	Ω
5 Output Power	$P_{2max.}$	23.8	26.0	24.0	23.3	W
6 Stall Torque	mNm	172 (24.36)	206 (29.18)	160 (22.66)	118 (16.72)	mNm (oz-in)
7 Efficiency	$h_{max.}$	81	83	81	78	%
8 Max Continuous Speed	$n_{e\ max.}$	10,000	10,000	10,000	10,000	rpm
9 Max Continuous Torque	$M_{e\ max.}$	30 (4.68)	33 (4.68)	30 (4.25)	30 (4.25)	mNm (oz-in)
10 Max Continuous Current	$I_{e\ max.}$	2.10	2.30	1.45	0.75	A
11 Back-EMF Constant	k_E	1.60	1.56	2.30	4.40	mV/rpm
12 Torque Constant	k_M	15.30	14.90	22.00	42.00	mNm/A
13 Motor Regulation	R/k^2	6.9	5.9	6.8	7.10	10^3/Nms
14 Friction Torque	T_F	1.68 (0.24)	1.64 (0.24)	1.54 (0.22)	1.68 (0.24)	mNm (oz-in)
15 Rotor Inductance	L	0.10	0.10	0.10	0.80	mH
16 Mechanical Time Constant	τ_m	6.9	5.9	6.8	7.1	ms
17 Rotor Inertia	J	10.00	10.00	10.00	10.00	g-cm²

General Data			
18 Thermal Resistance (rotor/body)	R_{th1}/R_{th2}	6/13	°C/W
19 Thermal Time Constant (rotor/stator)	t_{W1}/t_{W2}	10/450	S
20 Operating Temperature Range:	motor rotor	-30°C to 85°C (-22°F to 185°F) 100°C (212°F)	°C (°F) °C (°F)
21 Shaft Load Max.: (5 mm. from bearing)	 -radial -axial	With ball bearings 12.0 (43.2) 68 (244.59)	 N (oz) N (oz)
22 Shaft Play:	-radial -axial	<0.03 (0.0012) 0.15 (0.0059)	mm (inch) mm (inch)
23 Weight	g	111 (3.92)	g (oz)
24 Commutation Segment	-	9	segment

Execution Table

Gearbox	Single Shaft	E9	HEDS	MR2
R32	1	2	4	Upon Request
R22HT	24	25	Upon Request	Upon Request

No Load Speed vs. Torque

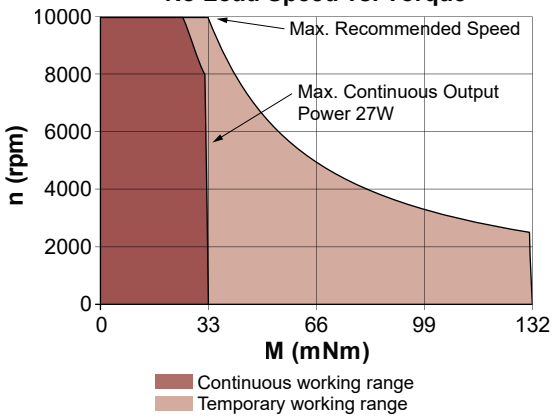

▶ Motor shaft rotates CW when seen from motor front face when +ve and -ve supply is given to respective terminals.

25GT2R82

Ø 25 mm • Graphite-Copper commutation • 47 mNm

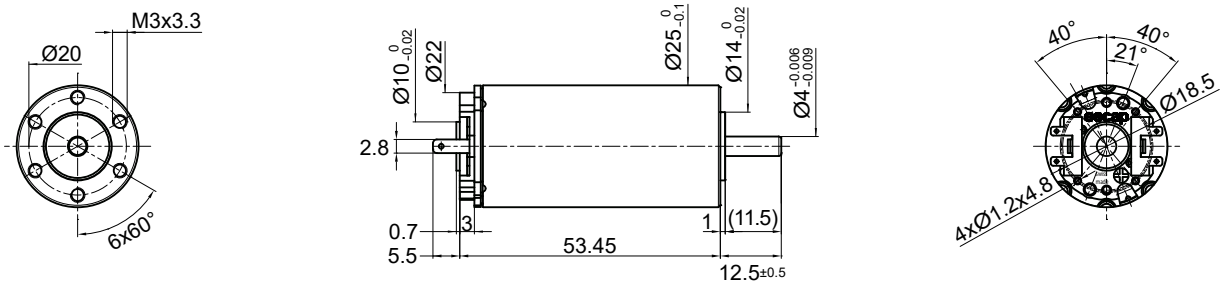

Dimensions in mm.

Electrical Data	Symbol	25GT2R82 •••• .1 222E	222P	230E	219E	Unit
1 Nominal Voltage	V	15	18	24	36	Volt
2 No-Load Speed	n_0	4,075	9,460	10,000	8,260	rpm
3 No-Load Current	I_0	80.0	140.0	120.0	65.0	mA
4 Terminal Resistance	R	4.0	1.3	1.8	7.4	Ω
5 Output Power	$P_{2max.}$	36.8	33.0	37.0	33.0	W
6 Stall Torque	mNm	129 (18.27)	249 (35.27)	315 (44.61)	194 (27.48)	mNm (oz-in)
7 Efficiency	$h_{max.}$	73	81	82	78	%
8 Max Continuous Speed	$n_{e\ max.}$	10,000	10,000	10,000	10,000	rpm
9 Max Continuous Torque	$M_{e\ max.}$	47 (5.95)	42 (5.95)	47 (6.67)	41 (5.81)	mNm (oz-in)
10 Max Continuous Current	$I_{e\ max.}$	1.44	2.50	2.20	1.06	A
11 Back-EMF Constant	k_E	3.60	1.88	2.40	4.30	mV/rpm
12 Torque Constant	k_M	34.40	18.00	23.00	41.10	mNm/A
13 Motor Regulation	R/k^2	3.4	4.0	4.2	4.40	10^3/Nms
14 Friction Torque	T_F	2.75 (0.39)	2.5 (0.36)	2.76 (0.4)	2.65 (0.38)	mNm (oz-in)
15 Rotor Inductance	L	0.30	0.08	0.14	0.50	mH
16 Mechanical Time Constant	τ_m	4.4	5.2	5.5	5.7	ms
17 Rotor Inertia	J	13.00	13.00	12.50	13.00	g-cm²

General Data			
18 Thermal Resistance (rotor/body)	R_{th1}/R_{th2}	5/11	°C/W
19 Thermal Time Constant (rotor/stator)	t_{W1}/t_{W2}	10/450	S
20 Operating Temperature Range:	motor rotor	-30°C to 85°C (-22°F to 185°F) 100°C (212°F)	°C (°F) °C (°F)
21 Shaft Load Max.: (5 mm. from bearing)	 -radial -axial	With ball bearings 25.0 (89.9) 100 (359.69)	 N (oz) N (oz)
22 Shaft Play:	-radial -axial	<0.03 (0.0012) 0.15 (0.0059)	mm (inch) mm (inch)
23 Weight	g	145 (5.12)	g (oz)
24 Commutation Segment	-	9	segment

Execution Table

Gearbox	Single Shaft	E9	HEDS	MR2
R32	6	8	–	Upon Request
R40	1	2	4	Upon Request
R22HT	20	21	Upon Request	Upon Request

No Load Speed vs. Torque

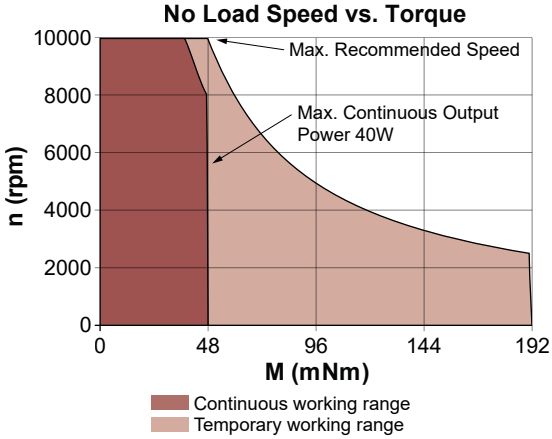

▶ Motor shaft rotates CW when seen from motor front face when +ve and -ve supply is given to respective terminals.

V092020 • © 2020 Portescap. Specifications subject to change without notice.

26N58

Ø 26 mm • Precious metal commutation • 17.9 mNm

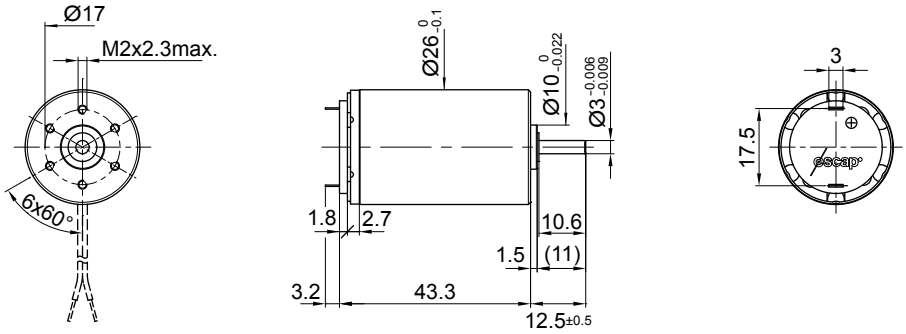

Dimensions in mm.

Electrical Data		Symbol	26N58 •••• .1				Unit
			216P	216E	113	110	
1	Nominal Voltage	V	6	12	15	24	Volt
2	No-Load Speed	n_0	4,600	4,735	5,470	6,660	rpm
3	No-Load Current	I_0	31.0	16.0	15.0	20.0	mA
4	Terminal Resistance	R	2.5	10.0	15.2	32.0	Ω
5	Output Power	$P_{2max.}$	6.2	6.0	5.2	4.6	W
6	Stall Torque	mNm	29.6 (4.2)	28.6 (4.06)	25 (3.55)	25 (3.55)	mNm (oz-in)
7	Efficiency	$h_{max.}$	79	78	77	70	%
8	Max Continuous Speed	$n_{e\ max.}$	8,000	8,000	8,000	8,000	rpm
9	Max Continuous Torque	$M_{e\ max.}$	17.9 (2.45)	17.3 (2.45)	15.1 (2.14)	13.3 (1.89)	mNm (oz-in)
10	Max Continuous Current	$I_{e\ max.}$	1.47	0.74	0.60	0.41	A
11	Back-EMF Constant	k_E	1.29	2.50	2.70	3.51	mV/rpm
12	Torque Constant	k_M	12.30	23.90	25.80	33.50	mNm/A
13	Motor Regulation	R/k^2	16.5	17.5	22.8	28.51	10^3/Nms
14	Friction Torque	T_F	0.38 (0.06)	0.38 (0.06)	0.38 (0.06)	0.38 (0.06)	mNm (oz-in)
15	Rotor Inductance	L	0.22	0.80	1.00	1.50	mH
16	Mechanical Time Constant	τ_m	9.9	10.5	13.7	17.1	ms
17	Rotor Inertia	J	6.00	6.00	6.00	6.00	g-cm²

General Data				
18	Thermal Resistance (rotor/body)	R_{th1}/R_{th2}	5/12	°C/W
19	Thermal Time Constant (rotor/stator)	t_{W1}/t_{W2}	10/640	S
20	Operating Temperature Range:	motor rotor	-30°C to 85°C (-22°F to 185°F) 100°C (212°F)	°C (°F) °C (°F)
21	Shaft Load Max.: (5 mm. from bearing)	 -radial -axial	With sleeve bearings 6.0 (21.6) 250 (899.2)	 N (oz) N (oz)
22	Shaft Play:	-radial -axial	<0.03 (0.0012) 0.15 (0.0059)	mm (inch) mm (inch)
23	Weight	g	114 (4.03)	g (oz)
24	Commutation Segment	-	9	segment

Execution Table

Gearbox	Single Shaft	Double Shaft for E9
R22	5	9
K24	5	9
K27	5	9

No Load Speed vs. Torque

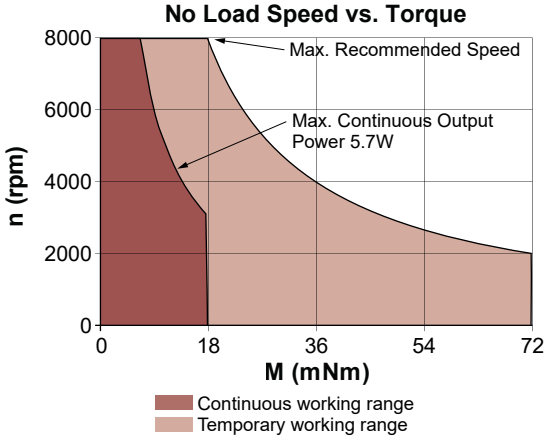

▶ Motor shaft rotates CW when seen from motor front face when +ve and -ve supply is given to respective terminals.

28DT12

Ø 28 mm • Graphite-Copper commutation • 41 mNm

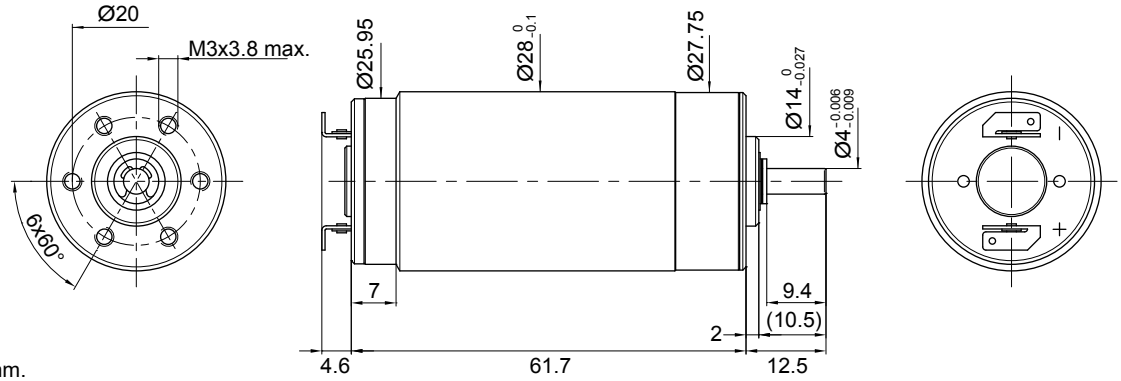

Dimensions in mm.

Electrical Data	Symbol	28DT12 •••• .1 222P	219P	222E	219E	Unit
1 Nominal Voltage	V	12	15	24	28	Volt
2 No-Load Speed	n_0	6,840	7,100	6,851	6,870	rpm
3 No-Load Current	I_0	210.0	180.0	110.0	90.0	mA
4 Terminal Resistance	R	1.9	2.9	6.2	9.9	Ω
5 Output Power	$P_{2max.}$	24.0	24.0	27.0	24.0	W
6 Stall Torque	mNm	102 (14.45)	101 (14.31)	126 (17.85)	107 (15.16)	mNm (oz-in)
7 Efficiency	$h_{max.}$	67	66	69	68	%
8 Max Continuous Speed	$n_{e\ max.}$	9,000	9,000	9,000	9,000	rpm
9 Max Continuous Torque	$M_{e\ max.}$	37 (5.1)	36 (5.1)	41 (5.81)	37 (5.24)	mNm (oz-in)
10 Max Continuous Current	$I_{e\ max.}$	2.50	2.00	1.40	1.10	A
11 Back-EMF Constant	k_E	1.70	2.04	3.40	3.95	mV/rpm
12 Torque Constant	k_M	16.20	19.50	32.50	37.70	mNm/A
13 Motor Regulation	R/k^2	7.0	8.0	6.0	7.00	10^3/Nms
14 Friction Torque	T_F	3.4 (0.49)	3.4 (0.49)	3.4 (0.49)	3.4 (0.49)	mNm (oz-in)
15 Rotor Inductance	L	0.20	0.30	0.75	1.10	mH
16 Mechanical Time Constant	τ_m	14.0	14.4	12.0	12.6	ms
17 Rotor Inertia	J	20.00	18.00	20.00	18.00	g-cm²

General Data			
18 Thermal Resistance (rotor/body)	R_{th1}/R_{th2}	3.5/8	°C/W
19 Thermal Time Constant (rotor/stator)	t_{W1}/t_{W2}	18/630	S
20 Operating Temperature Range:	motor rotor	-30°C to 85°C (-22°F to 185°F) 100°C (212°F)	°C (°F) °C (°F)
21 Shaft Load Max.: (5 mm. from bearing)	 -radial -axial	With sleeve bearings 8.0 (28.8) 500 (1798.5)	 N (oz) N (oz)
22 Shaft Play:	-radial -axial	<0.025 (0.001) 0.15 (0.0059)	mm (inch) mm (inch)
23 Weight	g	200 (7.06)	g (oz)
24 Commutation Segment	-	13	segment

Execution Table

Gearbox	Single Shaft	Double Shaft for E9	HEDS
R32	4	106	103
R40	1	98	Upon Request

No Load Speed vs. Torque

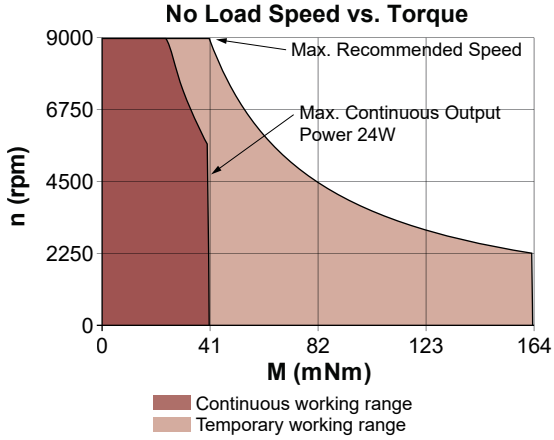

▶ Motor shaft rotates CW when seen from motor front face when +ve and -ve supply is given to respective terminals.

V092020 • © 2020 Portescap. Specifications subject to change without notice.

28L28

Ø 28 mm • Precious metal commutation • 21 mNm

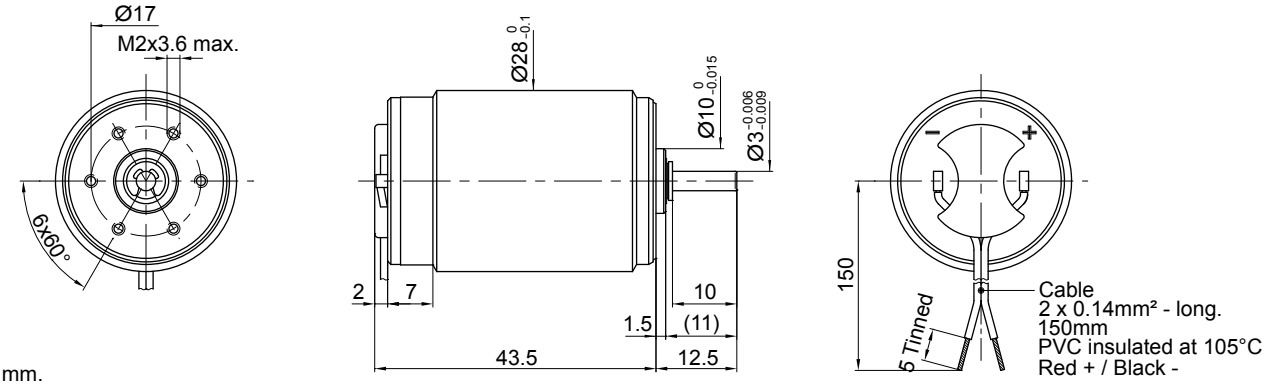

Dimensions in mm.

Electrical Data	Symbol	28L28 •••• .49 219	416E	413E	410E	Unit
1 Nominal Voltage	V	12	24	28	36	Volt
2 No-Load Speed	n_0	5,300	5,590	5,325	5,000	rpm
3 No-Load Current	I_0	22.0	11.0	9.0	6.6	mA
4 Terminal Resistance	R	6.0	19.5	33.0	71.0	Ω
5 Output Power	$P_{2max.}$	9.6	10.0	9.3	9.0	W
6 Stall Torque	mNm	43 (6.09)	50 (7.09)	32 (4.54)	34 (4.82)	mNm (oz-in)
7 Efficiency	$h_{max.}$	80	82	80	78	%
8 Max Continuous Speed	$n_{e\ max.}$	8,000	8,000	8,000	8,000	rpm
9 Max Continuous Torque	$M_{e\ max.}$	19.9 (2.98)	21 (2.98)	19.4 (2.75)	18.5 (2.62)	mNm (oz-in)
10 Max Continuous Current	$I_{e\ max.}$	0.95	0.53	0.40	0.28	A
11 Back-EMF Constant	k_E	2.24	4.26	5.20	7.10	mV/rpm
12 Torque Constant	k_M	21.40	40.70	49.70	67.80	mNm/A
13 Motor Regulation	R/k^2	13.0	12.0	13.2	15.20	10^3/Nms
14 Friction Torque	T_F	0.47 (0.07)	0.45 (0.07)	0.45 (0.07)	0.45 (0.07)	mNm (oz-in)
15 Rotor Inductance	L	0.50	2.40	3.20	5.20	mH
16 Mechanical Time Constant	τ_m	13.5	21.0	17.8	16.7	ms
17 Rotor Inertia	J	10.40	17.50	13.50	11.00	g-cm²

General Data			
18 Thermal Resistance (rotor/body)	R_{th1}/R_{th2}	5/12	°C/W
19 Thermal Time Constant (rotor/stator)	t_{W1}/t_{W2}	13/760	S
20 Operating Temperature Range:	motor rotor	-30°C to 85°C (-22°F to 185°F) 100°C (212°F)	°C (°F) °C (°F)
21 Shaft Load Max.: (5 mm. from bearing)	 -radial -axial	With sleeve bearings 6.0 (21.6) 250 (899.2)	 N (oz) N (oz)
22 Shaft Play:	-radial -axial	<0.18 (0.0007) 0.15 (0.0059)	mm (inch) mm (inch)
23 Weight	g	125 (4.41)	g (oz)
24 Commutation Segment	-	9	segment

Execution Table

Gearbox	Single Shaft	Double Shaft for E9
R22	164	317
R32	49	315

No Load Speed vs. Torque

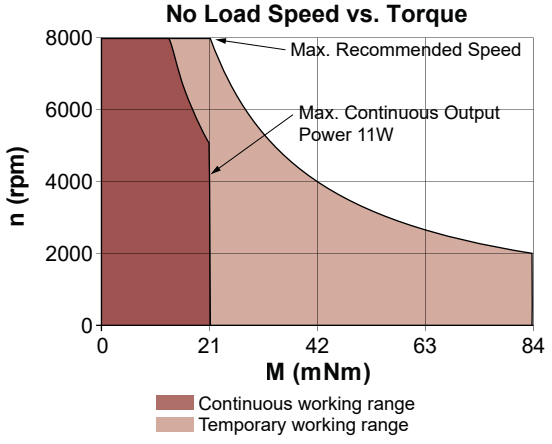

▶ Motor shaft rotates CW when seen from motor front face when +ve and -ve supply is given to respective terminals.

28LT12

Ø 28 mm • Graphite-Copper commutation • 24 mNm

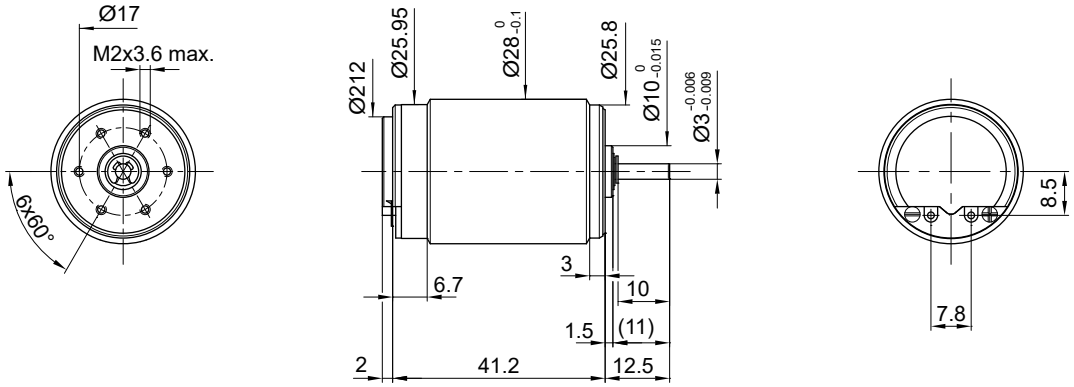

Dimensions in mm.

Electrical Data	Symbol	28LT12 •••• .49 219	28LT12 •••• .49 416E	Unit
1 Nominal Voltage	V	18	32	Volt
2 No-Load Speed	n_0	7,860	7,345	rpm
3 No-Load Current	I_0	65.0	35.0	mA
4 Terminal Resistance	R	6.2	19.9	Ω
5 Output Power	$P_{2max.}$	19.0	20.0	W
6 Stall Torque	mNm	63 (8.93)	65 (9.21)	mNm (oz-in)
7 Efficiency	$h_{max.}$	72	73	%
8 Max Continuous Speed	$n_{e\ max.}$	10,000	10,000	rpm
9 Max Continuous Torque	$M_{e\ max.}$	23 (3.4)	24 (3.4)	mNm (oz-in)
10 Max Continuous Current	$I_{e\ max.}$	1.13	0.63	A
11 Back-EMF Constant	k_E	2.24	4.26	mV/rpm
12 Torque Constant	k_M	21.40	40.70	mNm/A
13 Motor Regulation	R/k^2	13.0	12.0	10^3/Nms
14 Friction Torque	T_F	1.39 (0.2)	1.42 (0.21)	mNm (oz-in)
15 Rotor Inductance	L	0.50	2.40	mH
16 Mechanical Time Constant	τ_m	13.9	21.4	ms
17 Rotor Inertia	J	10.70	17.80	g-cm²

General Data			
18 Thermal Resistance (rotor/body)	R_{th1}/R_{th2}	5/12	°C/W
19 Thermal Time Constant (rotor/stator)	t_{W1}/t_{W2}	27/760	S
20 Operating Temperature Range:	motor rotor	-30°C to 85°C (-22°F to 185°F) 100°C (212°F)	°C (°F) °C (°F)
21 Shaft Load Max.: (5 mm. from bearing)	 -radial -axial	With sleeve bearings 6.0 (21.6) 250 (899.2)	 N (oz) N (oz)
22 Shaft Play:	-radial -axial	<0.018 (0.0007) 0.15 (0.0059)	mm (inch) mm (inch)
23 Weight	g	135 (4.77)	g (oz)
24 Commutation Segment	-	9	segment

Execution Table

Gearbox	Single Shaft	Double Shaft for E9
R22	164	319
R32	49	316

No Load Speed vs. Torque

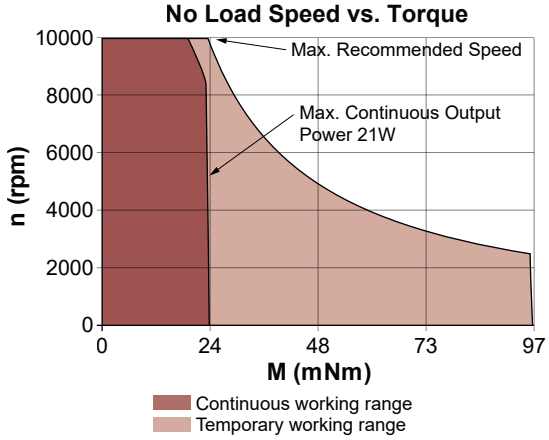

▶ Motor shaft rotates CW when seen from motor front face when +ve and -ve supply is given to respective terminals.

V092020 • © 2020 Portescap. Specifications subject to change without notice.

30GT2R82

Ø 30 mm • Graphite-Copper commutation • 92 mNm

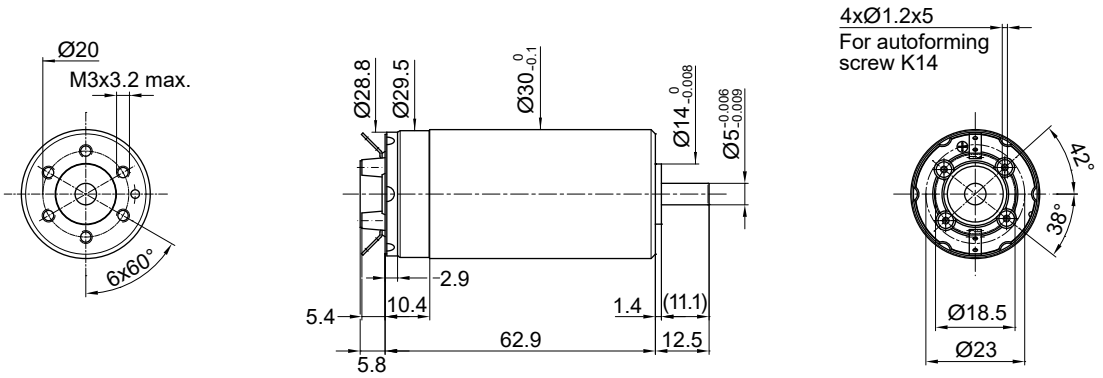

Dimensions in mm.

Electrical Data	Symbol	30GT2R82 •••• .4 234P	30GT2R82 •••• .4 234E	Unit
1 Nominal Voltage	V	15	35	Volt
2 No-Load Speed	n_0	7,090	8,600	rpm
3 No-Load Current	I_0	180.0	90.0	mA
4 Terminal Resistance	R	0.5	1.6	Ω
5 Output Power	$P_{2max.}$	77.0	82.0	W
6 Stall Torque	mNm	628 (88.94)	847 (119.95)	mNm (oz-in)
7 Efficiency	$h_{max.}$	85	88	%
8 Max Continuous Speed	$n_{e\ max.}$	10,000	10,000	rpm
9 Max Continuous Torque	$M_{e\ max.}$	87 (13.03)	92 (13.03)	mNm (oz-in)
10 Max Continuous Current	$I_{e\ max.}$	4.50	2.50	A
11 Back-EMF Constant	k_E	2.10	4.05	mV/rpm
12 Torque Constant	k_M	20.10	38.70	mNm/A
13 Motor Regulation	R/k^2	1.2	1.1	10^3/Nms
14 Friction Torque	T_F	3.62 (0.52)	3.48 (0.5)	mNm (oz-in)
15 Rotor Inductance	L	0.06	0.24	mH
16 Mechanical Time Constant	τ_m	4.0	3.6	ms
17 Rotor Inertia	J	33.00	33.00	g-cm²
General Data				
18 Thermal Resistance (rotor/body)	R_{th1}/R_{th2}	4.5/9		°C/W
19 Thermal Time Constant (rotor/stator)	t_{W1}/t_{W2}	18/630		S
20 Operating Temperature Range:	motor rotor	-30°C to 85°C (-22°F to 185°F) 100°C (212°F)		°C (°F) °C (°F)
21 Shaft Load Max.: (5 mm. from bearing)	 -radial -axial	With ball bearings 35.0 (125.9) 100 (359.6)		 N (oz) N (oz)
22 Shaft Play:	-radial -axial	negligible negligible		mm (inch) mm (inch)
23 Weight	g	310 (10.94)		g (oz)
24 Commutation Segment	-	13		segment

Execution Table

Gearbox	Single Shaft	E9	HEDS
R32	4	5	20
R40	4	5	Upon Request

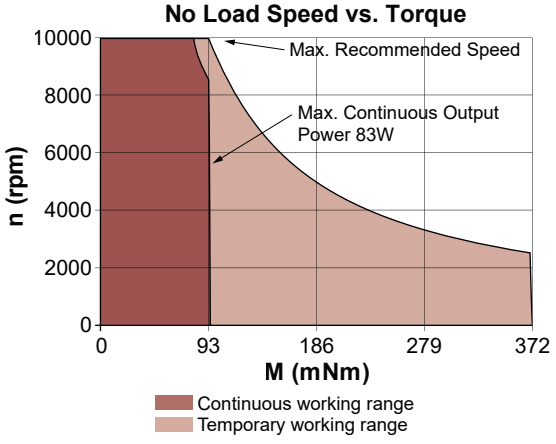

▶ Motor shaft rotates CW when seen from motor front face when +ve and -ve supply is given to respective terminals.

35NT2R32

Ø 35 mm • Graphite-Copper commutation • 56 mNm

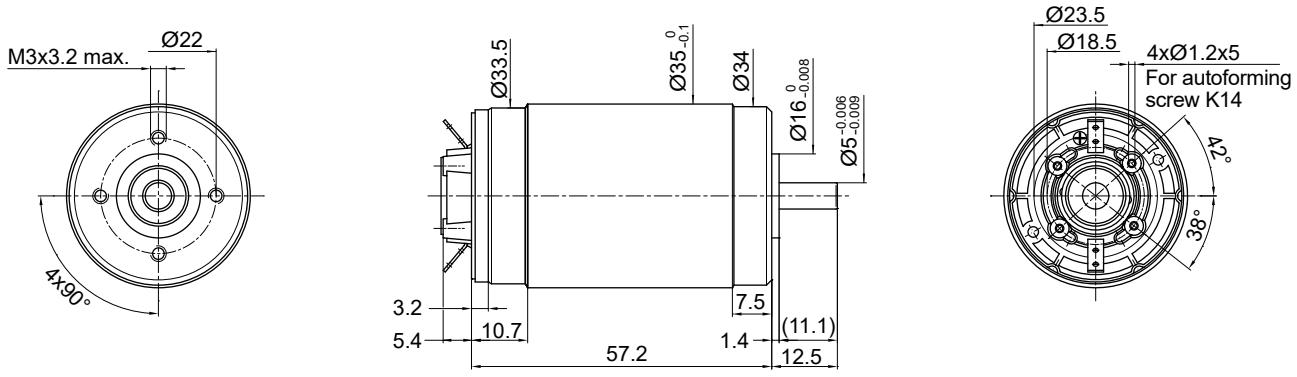

Dimensions in mm.

Electrical Data	Symbol	35NT2R32 •••• .1 228P	228E	416SP	Unit
1 Nominal Voltage	V	9	15	24	Volt
2 No-Load Speed	n_0	5,020	4,315	4,365	rpm
3 No-Load Current	I_0	180.0	90.0	50.0	mA
4 Terminal Resistance	R	1.0	3.6	8.3	Ω
5 Output Power	$P_{2max.}$	33.0	33.0	35.0	W
6 Stall Torque	mNm	151 (21.39)	137 (19.41)	150 (21.25)	mNm (oz-in)
7 Efficiency	$h_{max.}$	74	73	75	%
8 Max Continuous Speed	$n_{e\ max.}$	9,000	9,000	9,000	rpm
9 Max Continuous Torque	$M_{e\ max.}$	52 (7.65)	54 (7.65)	56 (7.94)	mNm (oz-in)
10 Max Continuous Current	$I_{e\ max.}$	3.30	1.75	1.18	A
11 Back-EMF Constant	k_E	1.76	3.40	5.40	mV/rpm
12 Torque Constant	k_M	16.80	32.50	51.60	mNm/A
13 Motor Regulation	R/k^2	3.5	3.4	3.1	10^3/Nms
14 Friction Torque	T_F	3 (0.43)	2.93 (0.42)	2.6 (0.37)	mNm (oz-in)
15 Rotor Inductance	L	0.13	0.52	1.30	mH
16 Mechanical Time Constant	τ_m	16.8	16.3	16.2	ms
17 Rotor Inertia	J	48.00	48.00	52.00	g-cm²

General Data			
18 Thermal Resistance (rotor/body)	R_{th1}/R_{th2}	4/8	°C/W
19 Thermal Time Constant (rotor/stator)	t_{W1}/t_{W2}	40/920	S
20 Operating Temperature Range:	motor rotor	-30°C to 85°C (-22°F to 185°F) 100°C (212°F)	°C (°F) °C (°F)
21 Shaft Load Max.: (5 mm. from bearing)	 -radial -axial	With ball bearings 35.0 (125.9) 100 (359.6)	 N (oz) N (oz)
22 Shaft Play:	-radial -axial	negligible negligible	mm (inch) mm (inch)
23 Weight	g	310 (10.94)	g (oz)
24 Commutation Segment	-	13	segment

Execution Table

Gearbox	Single Shaft	E9	HEDS
R32	54	66	Upon Request
R40	1	96	Upon Request

No Load Speed vs. Torque

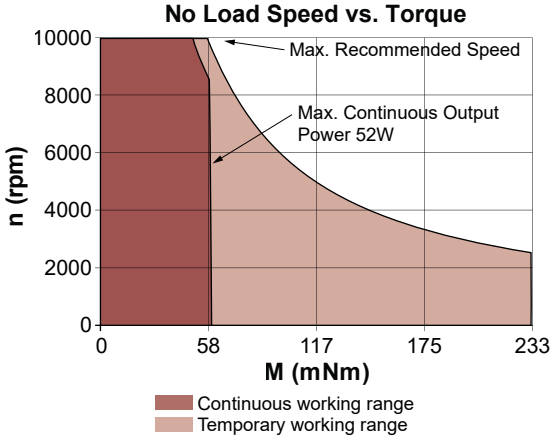

▶ Motor shaft rotates CW when seen from motor front face when +ve and -ve supply is given to respective terminals.

V092020 • © 2020 Portescap. Specifications subject to change without notice.

35NT2R82

Ø 35 mm • Graphite-Copper commutation • 114 mNm

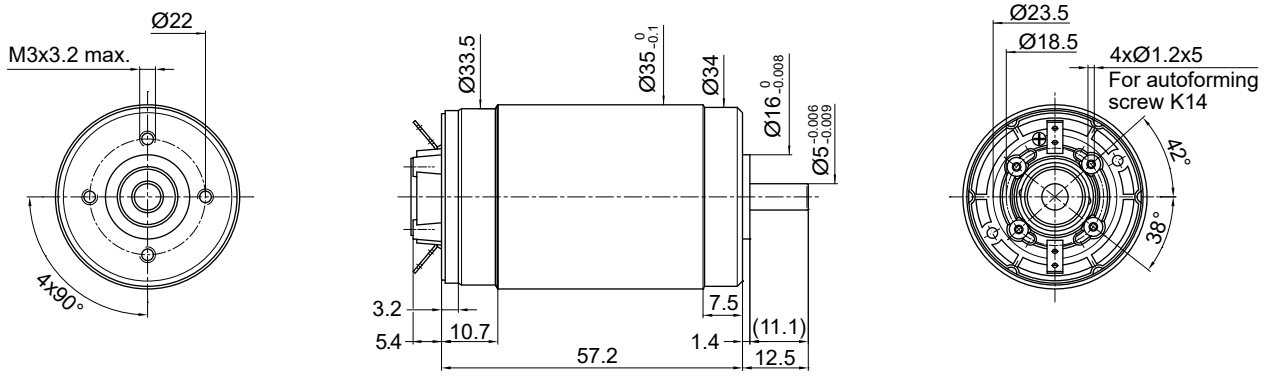

Dimensions in mm.

Electrical Data	Symbol	35NT2R82 •••• .1 426P	226E	426SP	426E	Unit
1 Nominal Voltage	V	18	28	32	60	Volt
2 No-Load Speed	n_0	6,765	6,935	5,850	5,760	rpm
3 No-Load Current	I_0	141.0	80.0	80.0	40.0	mA
4 Terminal Resistance	R	0.6	1.6	2.2	7.7	Ω
5 Output Power	$P_{2max.}$	102.0	91.0	103.0	107.0	W
6 Stall Torque	mNm	828 (117.26)	676 (95.73)	756 (107.06)	782 (110.75)	mNm (oz-in)
7 Efficiency	$h_{max.}$	87	87	86	86	%
8 Max Continuous Speed	$n_{e\ max.}$	9,000	9,000	9,000	9,000	rpm
9 Max Continuous Torque	$M_{e\ max.}$	108 (13.74)	97 (13.74)	109 (15.44)	114 (16.15)	mNm (oz-in)
10 Max Continuous Current	$I_{e\ max.}$	4.40	2.60	2.20	1.19	A
11 Back-EMF Constant	k_E	2.65	4.02	5.45	10.37	mV/rpm
12 Torque Constant	k_M	25.30	38.40	52.00	99.00	mNm/A
13 Motor Regulation	R/k^2	0.9	1.1	0.8	0.77	10^3/Nms
14 Friction Torque	T_F	3.57 (0.51)	3.07 (0.44)	4.16 (0.59)	3.96 (0.57)	mNm (oz-in)
15 Rotor Inductance	L	0.10	0.22	0.40	1.70	mH
16 Mechanical Time Constant	τ_m	6.1	5.9	5.9	5.5	ms
17 Rotor Inertia	J	71.40	54.00	71.40	71.40	g-cm²

General Data			
18 Thermal Resistance (rotor/body)	R_{th1}/R_{th2}	4/8	°C/W
19 Thermal Time Constant (rotor/stator)	t_{W1}/t_{W2}	40/920	S
20 Operating Temperature Range:	motor rotor	-30°C to 85°C (-22°F to 185°F) 100°C (212°F)	°C (°F) °C (°F)
21 Shaft Load Max.: (5 mm. from bearing)	 -radial -axial	With ball bearings 35.0 (125.9) 100 (359.6)	 N (oz) N (oz)
22 Shaft Play:	-radial -axial	negligible negligible	mm (inch) mm (inch)
23 Weight	g	310 (10.94)	g (oz)
24 Commutation Segment	-	13	segment

Execution Table

Gearbox	Single Shaft	E9	HEDS
R32	54	66	Upon Request
R40	1	96	Upon Request

No Load Speed vs. Torque

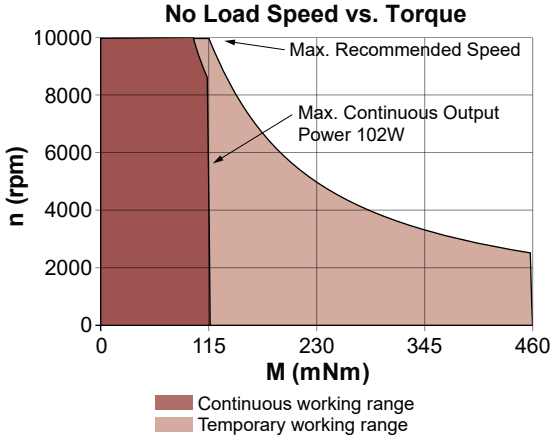

▶ Motor shaft rotates CW when seen from motor front face when +ve and -ve supply is given to respective terminals.

35GLT2R82

Ø 35 mm • Graphite-Copper commutation • 160 mNm

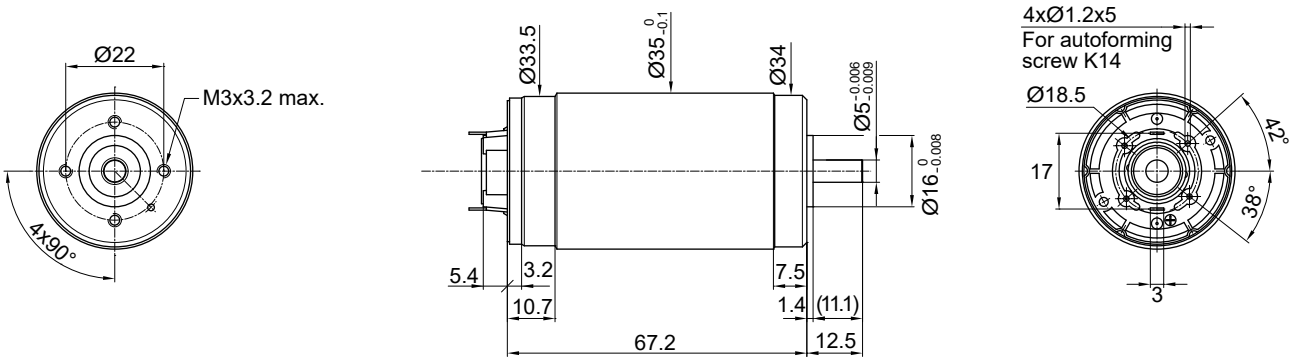

Dimensions in mm.

Electrical Data	Symbol	35GLT2R82 •••• .1					Unit
		426P	326P	234E	426SP	426E	
1 Nominal Voltage	V	24	24	48	48	90	Volt
2 No-Load Speed	n_0	6,260	5,835	7,490	6,175	5,439	rpm
3 No-Load Current	I_0	120.0	120.0	70.0	60.0	60.0	mA
4 Terminal Resistance	R	0.7	0.9	2.3	2.5	9.5	Ω
5 Output Power	$P_{2max.}$	136.0	124.0	122.0	142.0	150.0	W
6 Stall Torque	mNm	1327 (187.92)	1043 (147.71)	1300 (184.1)	1409 (199.54)	1487 (210.58)	mNm (oz-in)
7 Efficiency	$h_{max.}$	89	87	89	89	85	%
8 Max Continuous Speed	$n_{e\ max.}$	10,000	10,000	10,000	10,000	10,000	rpm
9 Max Continuous Torque	$M_{e\ max.}$	142 (18.7)	132 (18.7)	130 (18.41)	150 (21.25)	160 (22.66)	mNm (oz-in)
10 Max Continuous Current	$I_{e\ max.}$	4.20	3.50	2.20	2.10	1.05	A
11 Back-EMF Constant	k_E	3.82	4.09	6.39	7.75	16.44	mV/rpm
12 Torque Constant	k_M	36.50	39.10	61.00	74.00	157.00	mNm/A
13 Motor Regulation	R/k^2	0.5	0.6	0.6	0.46	0.39	10^3/Nms
14 Friction Torque	T_F	4.38 (0.63)	4.69 (0.67)	4.27 (0.61)	4.44 (0.63)	9.42 (1.34)	mNm (oz-in)
15 Rotor Inductance	L	0.10	0.15	0.25	0.40	1.70	mH
16 Mechanical Time Constant	τ_m	3.9	4.4	4.0	4.0	2.7	ms
17 Rotor Inertia	J	83.00	75.00	65.00	85.00	70.00	g-cm²

General Data			
18 Thermal Resistance (rotor/body)	R_{th1}/R_{th2}	4/8	°C/W
19 Thermal Time Constant (rotor/stator)	t_{W1}/t_{W2}	75/950	S
20 Operating Temperature Range:	motor rotor	-30°C to 85°C (-22°F to 185°F) 100°C (212°F)	°C (°F) °C (°F)
21 Shaft Load Max.: (5 mm. from bearing)	 -radial -axial	With ball bearings 35.0 (125.9) 100 (359.6)	 N (oz) N (oz)
22 Shaft Play:	-radial -axial	negligible negligible	mm (inch) mm (inch)
23 Weight	g	360 (12.7)	g (oz)
24 Commutation Segment	-	13	segment

Execution Table

Gearbox	Single Shaft	E9	HEDS
R32	1	50	Upon Request
R40	1	50	Upon Request

No Load Speed vs. Torque

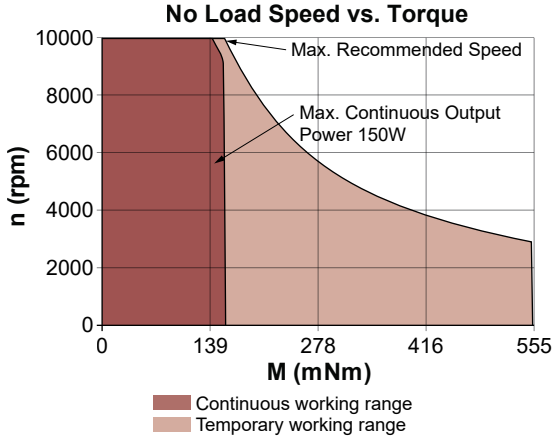

▶ Motor shaft rotates CW when seen from motor front face when +ve and -ve supply is given to respective terminals.

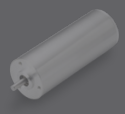
Brushless dc motors

Brush dc motors

Disc magnet motors

Can stack motors

Can stack linear actuators

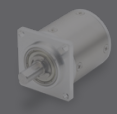
Gearheads

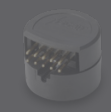
Encoders

Disc Magnet Motors

Get the simple motion control and precision of a stepper motor with the speed and acceleration of a brushless DC motor. The unique thin disc magnet enables finer step resolutions compared to a conventional permanent magnet stepper, while the low inertia and a shorter magnetic circuit with lower iron losses deliver significantly higher acceleration and maximum speed. These motors can be driven as a servo motor in applications requiring extremely fast incremental motion.

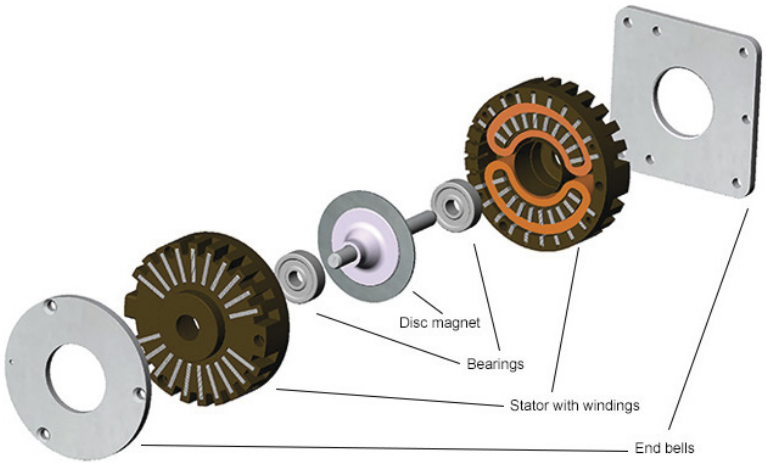

Simple Speed, Power and Precision

Feature	Details	Application Advantages
Stepper motor design	• No need for encoder feedback	• Simple open-loop positioning that can be digitally controlled
Microstepping capability	• Axial magnetization with high number of poles • Much smaller step angles compared to conventional stepper	• Nearly servo-like accuracy in a simpler positioning system
Thin multipolar rare earth disc magnet	• Low rotor inertia	• High acceleration • High start and stop frequencies • High power rate
Simple magnetic circuit	• No coupling between phases • Sinusoidal torque function • Low detent torque	• Superior angular resolution in microstep mode
Optimally dimensioned iron circuit	• Torque constant linear up to two times nominal current	• High peak torques • Capability to boost current
Choice of sintered bronze bearings or ball bearings	• Long bearing and lubrication life • Choice of bearing performance characteristics	• Increased service life and reliability for any application

Exceptional Dynamic Performance

Medical devices & clinical diagnostics
- Laboratory automation
- Medical pipettes
- Diagnostic analyzers
- Medical analyzers
- Sample preparation workstations

Security
- Access systems
- Surveillance

Aerospace
- Surveillance camera systems
- Valve actuation

Automation
- Textile yarn guide
- Pick and place machines

Other
- Electronics assembly
- Semiconductor assembly systems

Meet your Application's Working Point Requirements

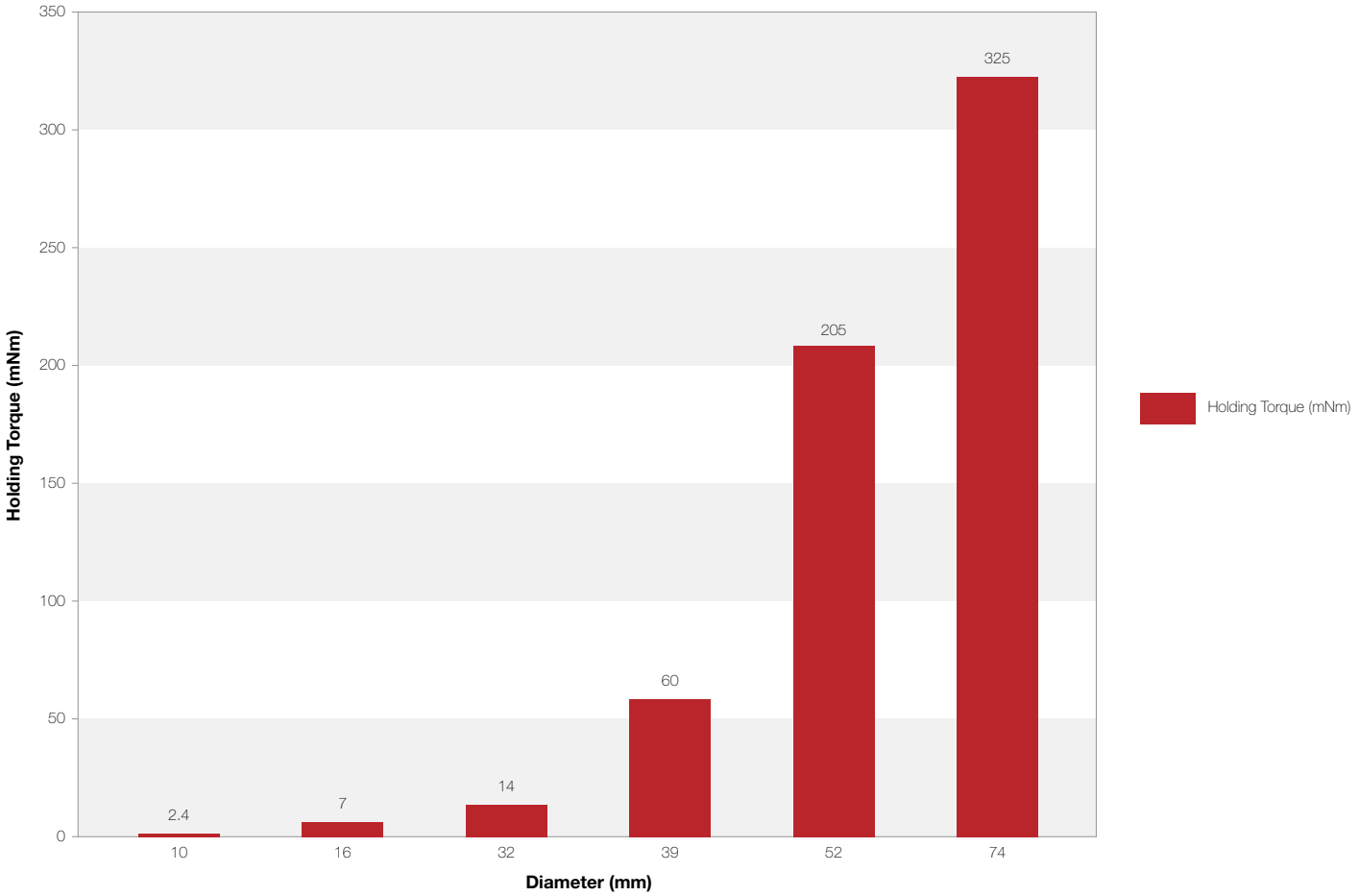

For complete product and application details, visit **portescap.com/disc-magnet**

P010 104 (Upon Request)

Ø 10 mm • 1.5 mNm

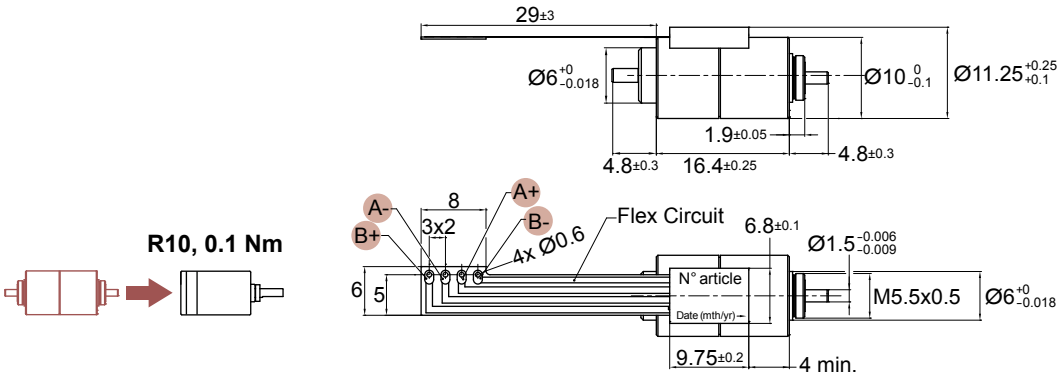

Dimensions in mm.

Electrical Data	P010 104 020 02	P010 104 003 02	Unit
1 Resistance per Phase, typ	19.0	3.0	Ohms
2 Inductance per Phase, typ	13.7	1.8	mH
3 Nominal Phase Current (2 ph. On)	0.17	0.44	A
4 Nominal Phase Current (1 ph. On)	0.24	0.62	A
5 Back EMF Amplitude	1.10	0.46	V/kstep/s
General Data			
6 Holding Torque, nominal current	1.5 (0.21)		mNm (oz-in)
7 Holding Torque, 1.5x nominal current (1)	2.1 (0.3)		mNm (oz-in)
8 Detent Torque	0.9 (0.13)		mNm (oz-in)
9 Rotor Inertia	0.070		kgm2 x 10-7
10 Step Angle	9		Degree
11 Absolute Accuracy 2 ph. On, Full step mode	+/- 5%		% Full Step
12 Steps Per Revolution	40		
13 Ambient Temperature Range (operating)	-20 to 50 (-4 to 122)		°C (°F)
14 Maximum Coil Temperature	130 (266)		°C (°F)
15 Thermal Resistance Coil-ambient (2)	66		°C/W
16 Natural Resonance Frequency (nominal current)	230		Hz
17 Electrical Time Constant	0.60		ms
18 Angular Acceleration (nominal current)	210,000		rad/s2
19 Bearing Type	Ball		
20 Dielectric Withstanding Voltage	500 VRMS for 5 seconds		VAC
21 Radial Shaft Play	30 @ 2N		µm
22 Axial Shaft Play	40 @ 2N		µm
23 Maximum Radial Shaft Load	2.5 (9)		N (oz)
24 Maximum Axial Shaft Load (3)	2.5 (9)		N (oz)
25 Weight	9 (0.32)		g (oz)
26 Power Rate (nominal current)	0.5		kW/s

Notes:
1. Measured with 1 phase ON. The max coil temperature must be respected
2. Motor unmounted
3. Shaft must be supported when press-fitting a pulley or pinion

Turbo Disc P010 104 003 Torque vs Speed (full step bipolar drive)

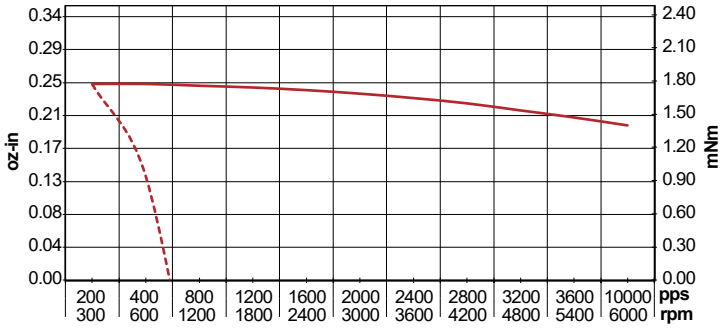

V092020 • © 2020 Portescap. Specifications subject to change without notice.

P010 064 (Upon Request)

Ø 10 mm • 1.8 mNm

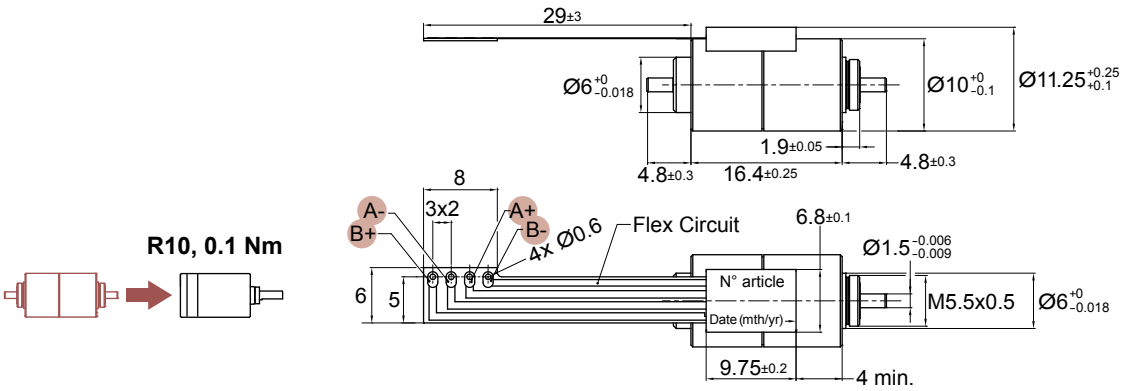

Dimensions in mm.

Electrical Data	P010 064 020 02	P010 064 003 02	Unit
1 Resistance per Phase, typ	19.0	3.0	Ohms
2 Inductance per Phase, typ	13.7	1.8	mH
3 Nominal Phase Current (2 ph. On)	0.17	0.44	A
4 Nominal Phase Current (1 ph. On)	0.24	0.62	A
5 Back EMF Amplitude	2.20	0.94	V/kstep/s
General Data			
6 Holding Torque, nominal current	1.8 (0.25)		mNm (oz-in)
7 Holding Torque, 1.5x nominal current (1)	2.5 (0.35)		mNm (oz-in)
8 Detent Torque	0.9 (0.13)		mNm (oz-in)
9 Rotor Inertia	0.070		kgm2 x 10-7
10 Step Angle	15		Degree
11 Absolute Accuracy 2 ph. On, Full step mode	+/- 5%		% Full Step
12 Steps Per Revolution	24		
13 Ambient Temperature Range (operating)	-20 to 50 (-4 to 122)		°C (°F)
14 Maximum Coil Temperature	130 (266)		°C (°F)
15 Thermal Resistance Coil-ambient (2)	66		°C/W
16 Natural Resonance Frequency (nominal current)	200		Hz
17 Electrical Time Constant	0.60		ms
18 Angular Acceleration (nominal current)	260,000		rad/s2
19 Bearing Type	Ball		
20 Dielectric Withstanding Voltage	500 VRMS for 5 seconds		VAC
21 Radial Shaft Play	30 @ 2N		µm
22 Axial Shaft Play	40 @ 2N		µm
23 Maximum Radial Shaft Load	2.5 (9)		N (oz)
24 Maximum Axial Shaft Load (3)	2.5 (9)		N (oz)
25 Weight	9 (0.32)		g (oz)
26 Power Rate (nominal current)	0.5		kW/s

Notes:
1. Measured with 1 phase ON. The max coil temperature must be respected
2. Motor unmounted
3. Shaft must be supported when press-fitting a pulley or pinion

Turbo Disc P010 064 003 Torque vs Speed (full step bipolar drive)

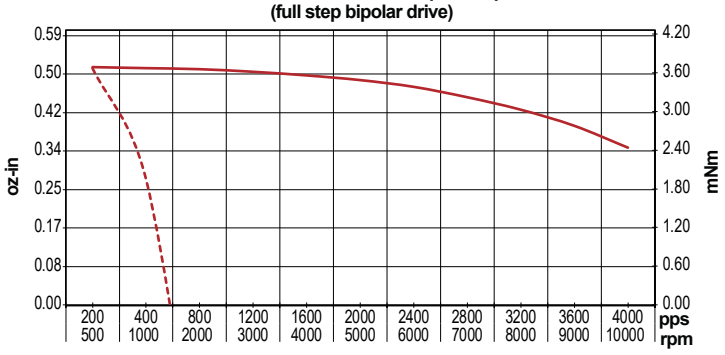

—P010 064 003 Pull-Out Torque @ 0.6A, 12V - - P010 064 003 Pull-In Torque @ 0.6A, 12V

PH010 104 (Upon Request)

Ø 10 mm • 2.1 mNm

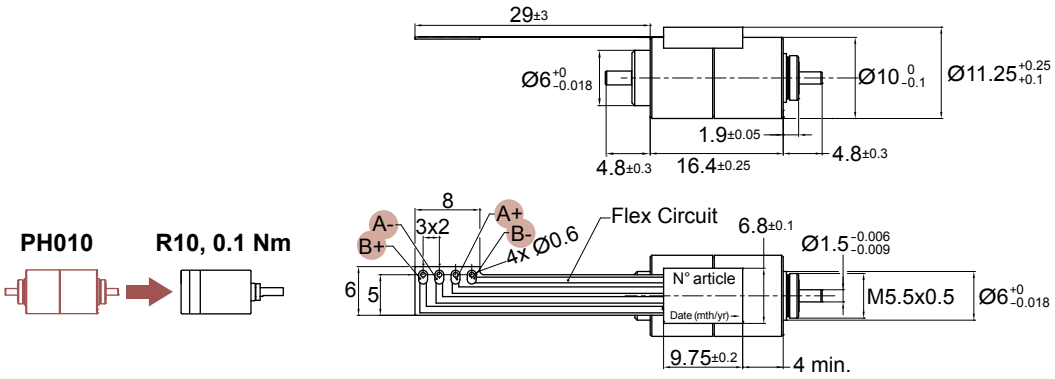

Dimensions in mm.

Electrical Data	PH010 104 020 04	PH010 104 010 04	PH010 104 003 04	Unit
1 Resistance per Phase, typ	19.0	10.0	3.0	Ohms
2 Inductance per Phase, typ	8.4	4.2	1.3	mH
3 Nominal Phase Current (2 ph. On)	0.17	0.24	0.44	A
4 Nominal Phase Current (1 ph. On)	0.24	0.34	0.62	A
5 Back EMF Amplitude	1.58	1.18	0.64	V/kstep/s
General Data				
6 Holding Torque, nominal current		2.1 (0.3)		mNm (oz-in)
7 Holding Torque, 1.5x nominal current (1)		3.16 (0.45)		mNm (oz-in)
8 Detent Torque		1 (0.14)		mNm (oz-in)
9 Rotor Inertia		0.070		kgm2 x 10-7
10 Step Angle		9		Degree
11 Absolute Accuracy 2 ph. On, Full step mode		+/- 5%		% Full Step
12 Steps Per Revolution		40		
13 Ambient Temperature Range (operating)		-20 to 50 (-4 to 122)		°C (°F)
14 Maximum Coil Temperature		130 (266)		°C (°F)
15 Thermal Resistance Coil-ambient (2)		66		°C/W
16 Natural Resonance Frequency (nominal current)		276		Hz
17 Electrical Time Constant		0.42		ms
18 Angular Acceleration (nominal current)		301,758		rad/s2
19 Bearing Type		Ball		
20 Dielectric Withstanding Voltage		500 VRMS for 5 seconds		VAC
21 Radial Shaft Play		30@2N		µm
22 Axial Shaft Play		40@2N		µm
23 Maximum Radial Shaft Load		2.5 (9)		N (oz)
24 Maximum Axial Shaft Load (3)		2.5 (9)		N (oz)
25 Weight		9 (0.32)		g (oz)
26 Power Rate (nominal current)		0.5		kW/s

Notes:
1. Measured with 1 phase ON. The max coil temperature must be respected
2. Motor unmounted
3. Shaft must be supported when press-fitting a pulley or pinion

Turbo Disc PH010 104 003 Torque vs Speed (full step bipolar drive)

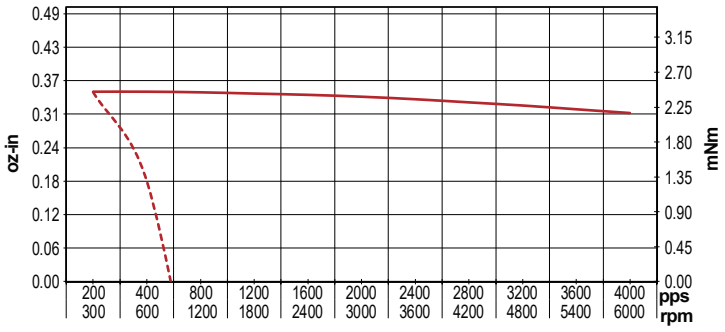

PH010 104 003 Pull-Out Torque @ 0.6A, 12V PH010 104 003 Pull-In Torque @ 0.6A, 12V

V092020 • © 2020 Portescap. Specifications subject to change without notice.

PH010 064 (Upon Request)

Ø 10 mm • 2.4 mNm

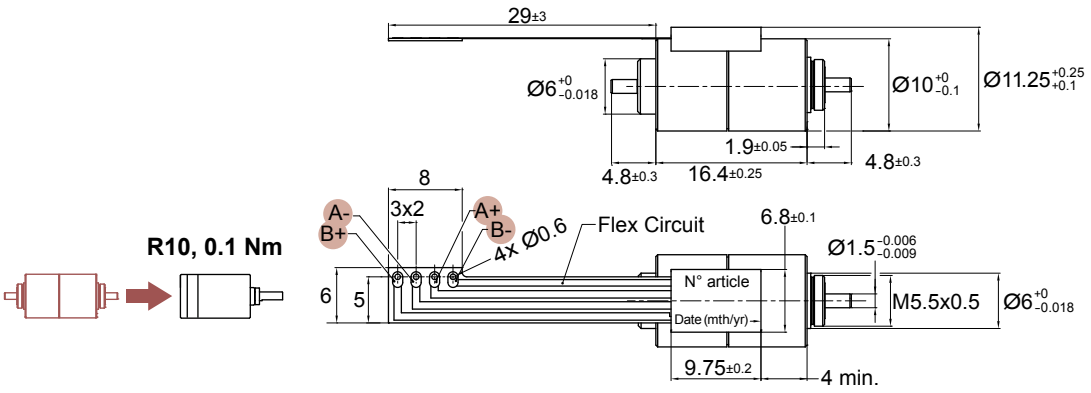

Dimensions in mm.

Electrical Data		PH010 064 020 04	PH010 064 010 04	PH010 064 003 04	Unit
1	Resistance per Phase, typ	19.0	10.0	3.0	Ohms
2	Inductance per Phase, typ	8.4	4.2	1.3	mH
3	Nominal Phase Current (2 ph. On)	0.17	0.24	0.44	A
4	Nominal Phase Current (1 ph. On)	0.24	0.34	0.62	A
5	Back EMF Amplitude	3.00	2.25	1.21	V/kstep/s

General Data			
6	Holding Torque, nominal current	2.4 (0.34)	mNm (oz-in)
7	Holding Torque, 1.5x nominal current (1)	3.6 (0.51)	mNm (oz-in)
8	Detent Torque	1.1 (0.16)	mNm (oz-in)
9	Rotor Inertia	0.070	kgm2 x 10-7
10	Step Angle	15	Degree
11	Absolute Accuracy 2 ph. On, Full step mode	+/- 5%	% Full Step
12	Steps Per Revolution	24	
13	Ambient Temperature Range (operating)	-20 to 50 (-4 to 122)	°C (°F)
14	Maximum Coil Temperature	130 (266)	°C (°F)
15	Thermal Resistance Coil-ambient (2)	66	°C/W
16	Natural Resonance Frequency (nominal current)	229	Hz
17	Electrical Time Constant	0.42	ms
18	Angular Acceleration (nominal current)	343,775	rad/s2
19	Bearing Type	Ball	
20	Dielectric Withstanding Voltage	500 VRMS for 5 seconds	VAC
21	Radial Shaft Play	30@2N	µm
22	Axial Shaft Play	40@2N	µm
23	Maximum Radial Shaft Load	2.5 (9)	N (oz)
24	Maximum Axial Shaft Load (3)	2.5 (9)	N (oz)
25	Weight	9 (0.32)	g (oz)
26	Power Rate (nominal current)	0.5	kW/s

Notes:
1. Measured with 1 phase ON. The max coil temperature must be respected
2. Motor unmounted
3. Shaft must be supported when press-fitting a pulley or pinion

Turbo Disc PH010 064 003 Torque vs Speed (full step bipolar drive)

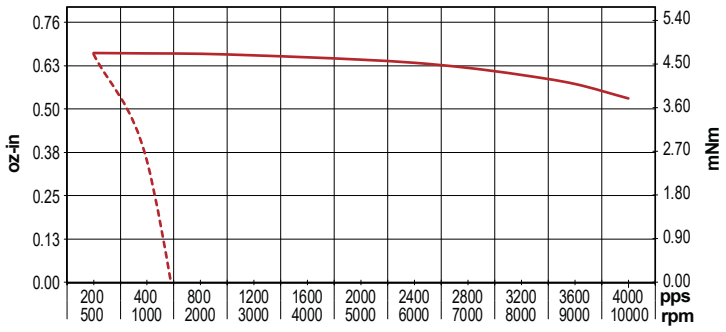

P110 104

Ø 16 mm • 6.2 mNm

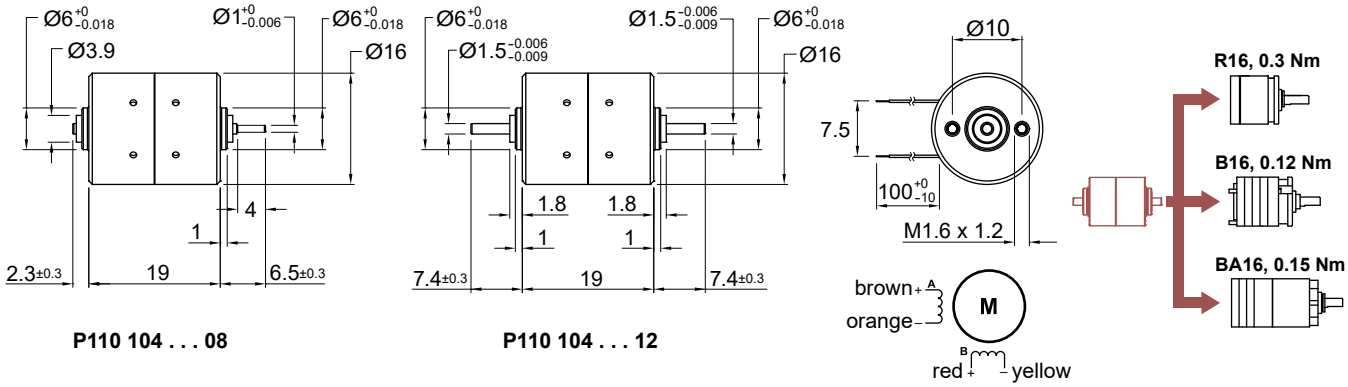

P110 104 . . . 08 **P110 104 . . . 12**

Dimensions in mm.

Electrical Data		P110 104 068 08/12	P110 104 015 08/12	P110 104 2.5 08/12	Unit
1	Resistance per Phase, typ	62.0	15.0	2.5	Ohms
2	Inductance per Phase, typ	46.0	12.0	2.2	mH
3	Nominal Phase Current (2 ph. On)	0.12	0.25	0.63	A
4	Nominal Phase Current (1 ph. On)	0.17	0.35	0.90	A
5	Back EMF Amplitude	5.70	2.80	1.10	V/kstep/s
General Data					
6	Holding Torque, nominal current	6.2 (0.88)			mNm (oz-in)
7	Holding Torque, 1.5x nominal current (1)	8.7 (1.23)			mNm (oz-in)
8	Detent Torque	1.65 (0.24)			mNm (oz-in)
9	Rotor Inertia	0.400			$kgm^2 \times 10^{-7}$
10	Step Angle	9			Degree
11	Absolute Accuracy 2 ph. On, Full step mode	+/- 5%			% Full Step
12	Steps Per Revolution	40			
13	Ambient Temperature Range (operating)	-20 to 50 (-4 to 122)			°C (°F)
14	Maximum Coil Temperature	130 (266)			°C (°F)
15	Thermal Resistance Coil-ambient (2)	45			°C/W
16	Natural Resonance Frequency (nominal current)	200			Hz
17	Electrical Time Constant	0.80			ms
18	Angular Acceleration (nominal current)	155,000			rad/s^2
19	Bearing Type	Ball			
20	Dielectric Withstanding Voltage	500 VRMS for 5 seconds			VAC
21	Radial Shaft Play	30@2N			µm
22	Axial Shaft Play	40@2N			µm
23	Maximum Radial Shaft Load	2.5 (9)			N (oz)
24	Maximum Axial Shaft Load (3)	2.5 (9)			N (oz)
25	Weight	23 (0.81)			g (oz)
26	Power Rate (nominal current)	1.2			kW/s

Notes:
1. Measured with 1 phase ON. The max coil temperature must be respected
2. Motor unmounted
3. Shaft must be supported when press-fitting a pulley or pinion

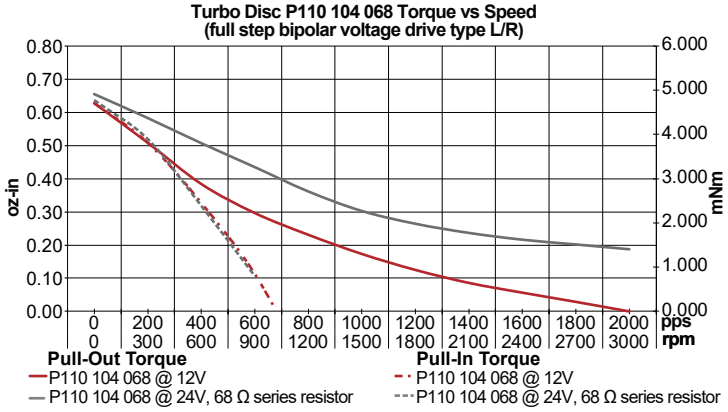

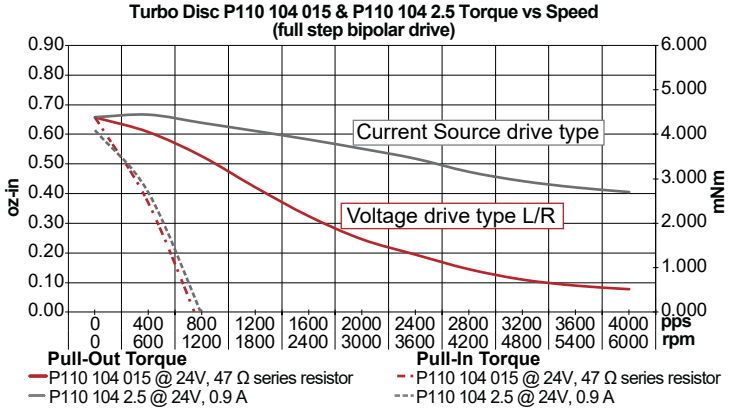

V092020 • © 2020 Portescap. Specifications subject to change without notice.

P110 064

Ø 16 mm • 7 mNm

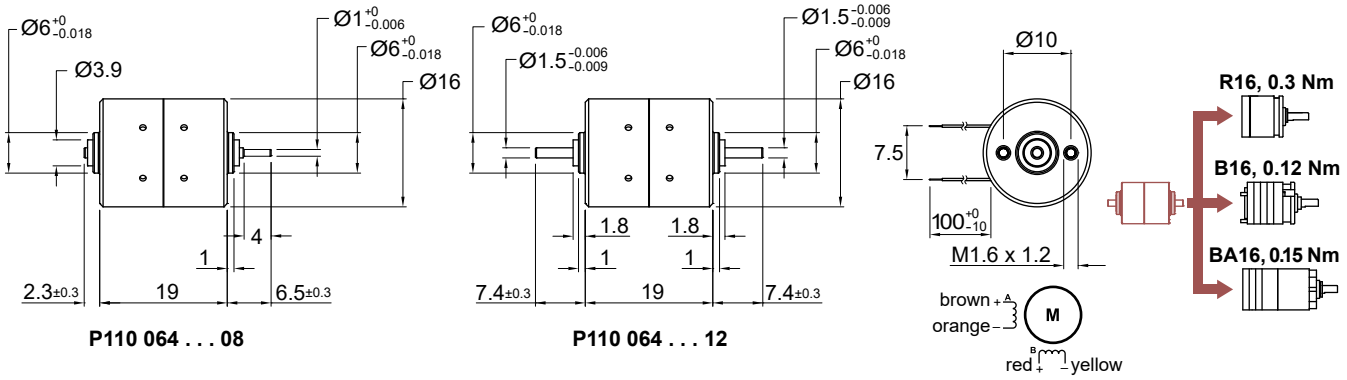

Dimensions in mm.

Electrical Data		P110 064 068 08/12	P110 064 015 08/12	P110 064 2.5 08/12	Unit
1	Resistance per Phase, typ	62.0	15.0	2.5	Ohms
2	Inductance per Phase, typ	46.0	12.0	2.2	mH
3	Nominal Phase Current (2 ph. On)	0.12	0.25	0.63	A
4	Nominal Phase Current (1 ph. On)	0.17	0.35	0.90	A
5	Back EMF Amplitude	10.80	5.20	2.00	V/kstep/s
General Data					
6	Holding Torque, nominal current		7 (0.99)		mNm (oz-in)
7	Holding Torque, 1.5x nominal current (1)		10 (1.42)		mNm (oz-in)
8	Detent Torque		1.65 (0.24)		mNm (oz-in)
9	Rotor Inertia		0.400		$kgm^2 \times 10^{-7}$
10	Step Angle		15		Degree
11	Absolute Accuracy 2 ph. On, Full step mode		+/- 5%		% Full Step
12	Steps Per Revolution		24		
13	Ambient Temperature Range (operating)		-20 to 50 (-4 to 122)		°C (°F)
14	Maximum Coil Temperature		130 (266)		°C (°F)
15	Thermal Resistance Coil-ambient (2)		45		°C/W
16	Natural Resonance Frequency (nominal current)		160		Hz
17	Electrical Time Constant		0.80		ms
18	Angular Acceleration (nominal current)		175,000		rad/s^2
19	Bearing Type		Ball		
20	Dielectric Withstanding Voltage		500 VRMS for 5 seconds		VAC
21	Radial Shaft Play		30@2N		µm
22	Axial Shaft Play		40@2N		µm
23	Maximum Radial Shaft Load		2.5 (9)		N (oz)
24	Maximum Axial Shaft Load (3)		2.5 (9)		N (oz)
25	Weight		23 (0.81)		g (oz)
26	Power Rate (nominal current)		1.2		kW/s

Notes:
1. Measured with 1 phase ON. The max coil temperature must be respected
2. Motor unmounted
3. Shaft must be supported when press-fitting a pulley or pinion

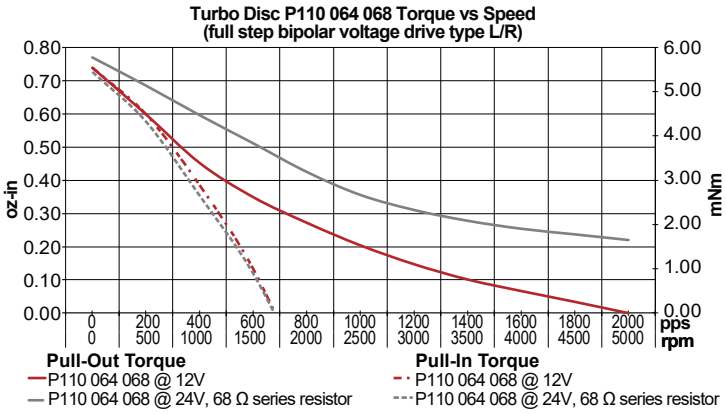

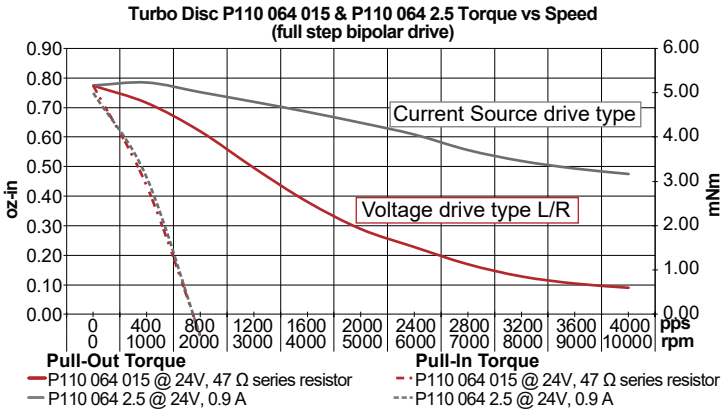

P310

Ø 32 mm • 14 mNm

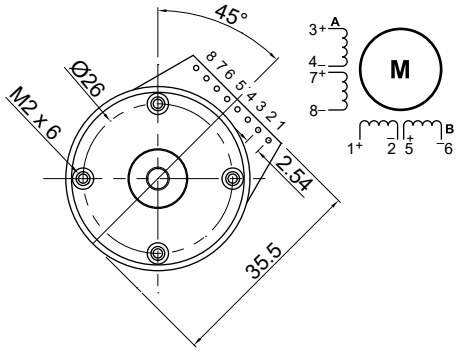

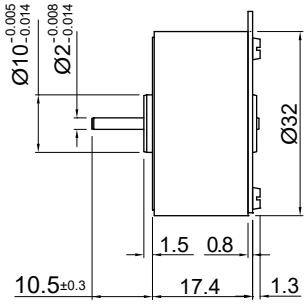

P310 158 . . . 09

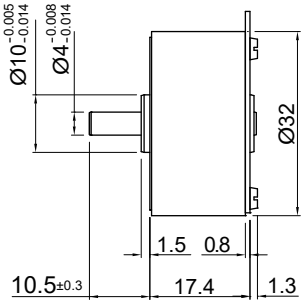

P310 158 . . . 10

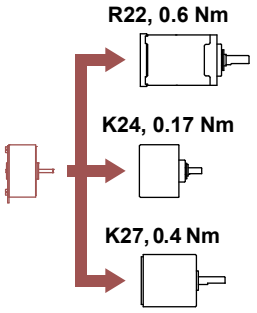

Dimensions in mm.

Electrical Data		P310 158 170		P310 158 005		Unit
		09/10 (series)	09/10 (parallel)	09/10 (series)	09/10 (parallel)	
1	Resistance per Phase, typ	332.0	83.0	10.5	2.6	Ohms
2	Inductance per Phase, typ	184.0	46.0	6.4	1.6	mH
3	Nominal Phase Current (2 ph. On)	0.06	0.12	0.36	0.72	A
4	Nominal Phase Current (1 ph. On)	0.09	0.17	0.51	1.00	A
5	Back EMF Amplitude	18.00	9.00	3.20	1.60	V/kstep/s

General Data			
6	Holding Torque, nominal current	14 (2)	mNm (oz-in)
7	Holding Torque, 1.5x nominal current (1)	20 (2.83)	mNm (oz-in)
8	Detent Torque	2.6 (0.37)	mNm (oz-in)
9	Rotor Inertia	0.860	$kgm^2 \times 10^{-7}$
10	Step Angle	6	Degree
11	Absolute Accuracy 2 ph. On, Full step mode	+/- 5%	% Full Step
12	Steps Per Revolution	60	
13	Ambient Temperature Range (operating)	-20 to 50 (-4 to 122)	°C (°F)
14	Maximum Coil Temperature	130 (266)	°C (°F)
15	Thermal Resistance Coil-ambient (2)	25	°C/W
16	Natural Resonance Frequency (nominal current)	230	Hz
17	Electrical Time Constant	0.60	ms
18	Angular Acceleration (nominal current)	140,000	rad/s^2
19	Bearing Type	Sleeve or Ball	
20	Dielectric Withstanding Voltage	500 VRMS for 5 seconds	VAC
21	Radial Shaft Play	35@5N / 15@1N	µm
22	Axial Shaft Play	100@5N / 10@1N	µm
23	Maximum Radial Shaft Load	1 / 10 (3.6 / 36)	N (oz)
24	Maximum Axial Shaft Load (3)	0.5 / 20 (1.8 / 72)	N (oz)
25	Weight	40 (1.4)	g (oz)
26	Power Rate (nominal current)	1.7	kW/s

Notes:
1. Measured with 1 phase ON. The max coil temperature must be respected
2. Motor unmounted
3. Shaft must be supported when press-fitting a pulley or pinion

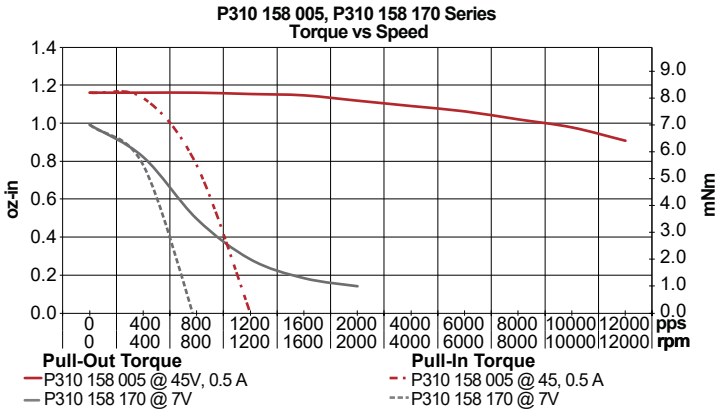

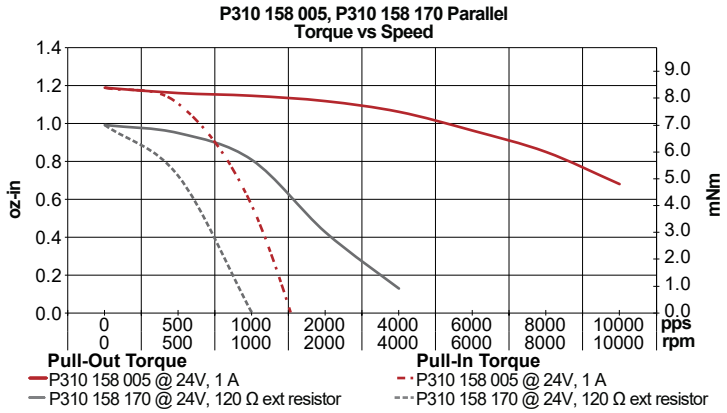

V092020 • © 2020 Portescap. Specifications subject to change without notice.

P430

Ø 39 mm • 60 mNm

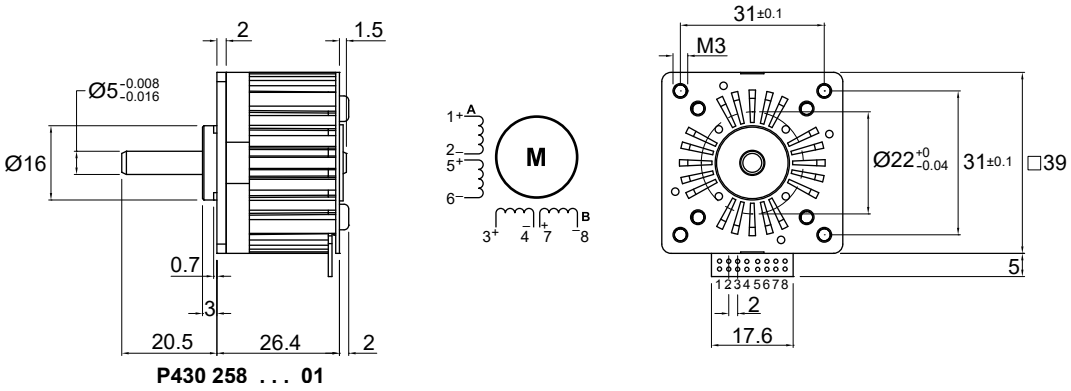

P430 258 . . . 01

Dimensions in mm.

Electrical Data		P430 258 013 01 (series)	P430 258 013 01 (parallel)	P430 258 005 01 (series)	P430 258 005 01 (parallel)	Unit
1	Resistance per Phase, typ	26.0	6.5	10.0	2.5	Ohms
2	Inductance per Phase, typ	40.0	10.0	14.0	3.5	mH
3	Nominal Phase Current (2 ph. On)	0.34	0.68	0.56	1.12	A
4	Nominal Phase Current (1 ph. On)	0.50	1.00	0.80	1.60	A
5	Back EMF Amplitude	7.50	3.80	4.70	2.30	V/kstep/s

General Data			
6	Holding Torque, nominal current	60 (8.5)	mNm (oz-in)
7	Holding Torque, 1.5x nominal current (1)	86 (12)	mNm (oz-in)
8	Detent Torque	6.5 (0.93)	mNm (oz-in)
9	Rotor Inertia	3.000	$kgm^2 \times 10^{-7}$
10	Step Angle	4	Degree
11	Absolute Accuracy 2 ph. On, Full step mode	+/- 5%	% Full Step
12	Steps Per Revolution	100	
13	Ambient Temperature Range (operating)	-20 to 50 (-4 to 122)	°C (°F)
14	Maximum Coil Temperature	130 (266)	°C (°F)
15	Thermal Resistance Coil-ambient (2)	11	°C/W
16	Natural Resonance Frequency (nominal current)	360	Hz
17	Electrical Time Constant	1.50	ms
18	Angular Acceleration (nominal current)	200,000	rad/s^2
19	Bearing Type	Ball	
20	Dielectric Withstanding Voltage	500 VRMS for 5 seconds	VAC
21	Radial Shaft Play	15@5N	µm
22	Axial Shaft Play	10@5N	µm
23	Maximum Radial Shaft Load	20 (72)	N (oz)
24	Maximum Axial Shaft Load (3)	30 (108)	N (oz)
25	Weight	100 (3.5)	g (oz)
26	Power Rate (nominal current)	12.0	kW/s

Notes:
1. Measured with 1 phase ON. The max coil temperature must be respected
2. Motor unmounted
3. Shaft must be supported when press-fitting a pulley or pinion

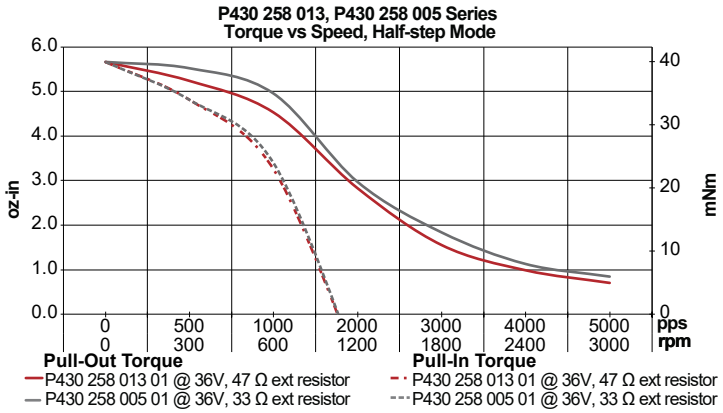

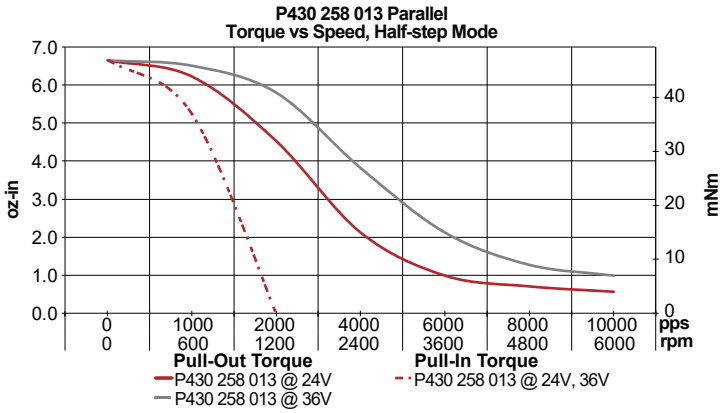

P520

Ø 52 mm •120 mNm

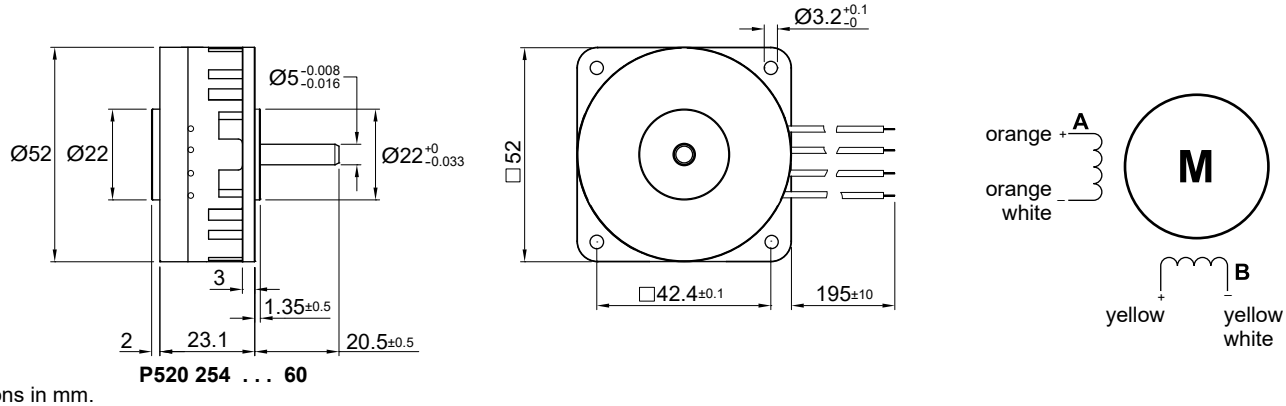

Dimensions in mm.

Electrical Data	P520 254 013 60	P520 254 004 60	P520 254 0.7 60	Unit
1 Resistance per Phase, typ	13.5	4.4	0.7	Ohms
2 Inductance per Phase, typ	27.0	8.0	1.3	mH
3 Nominal Phase Current (2 ph. On)	0.50	0.90	2.30	A
4 Nominal Phase Current (1 ph. On)	0.75	1.30	3.30	A
5 Back EMF Amplitude	9.80	5.50	2.10	V/kstep/s

General Data		
6 Holding Torque, nominal current	120 (17)	mNm (oz-in)
7 Holding Torque, 1.5x nominal current (1)	170 (24)	mNm (oz-in)
8 Detent Torque	18 (2.55)	mNm (oz-in)
9 Rotor Inertia	12.000	$kgm^2 \times 10^{-7}$
10 Step Angle	3.6	Degree
11 Absolute Accuracy 2 ph. On, Full step mode	+/- 5%	% Full Step
12 Steps Per Revolution	100	
13 Ambient Temperature Range (operating)	-20 to 50 (-4 to 122)	°C (°F)
14 Maximum Coil Temperature	130 (266)	°C (°F)
15 Thermal Resistance Coil-ambient (2)	9.5	°C/W
16 Natural Resonance Frequency (nominal current)	250	Hz
17 Electrical Time Constant	1.80	ms
18 Angular Acceleration (nominal current)	100,000	rad/s^2
19 Bearing Type	Ball	
20 Dielectric Withstanding Voltage	500 VRMS for 5 seconds	VAC
21 Radial Shaft Play	15@5N	µm
22 Axial Shaft Play	10@5N	µm
23 Maximum Radial Shaft Load	20 (72)	N (oz)
24 Maximum Axial Shaft Load (3)	30 (108)	N (oz)
25 Weight	180 (6.3)	g (oz)
26 Power Rate (nominal current)	12.0	kW/s

Notes:
1. Measured with 1 phase ON. The max coil temperature must be respected
2. Motor unmounted
3. Shaft must be supported when press-fitting a pulley or pinion

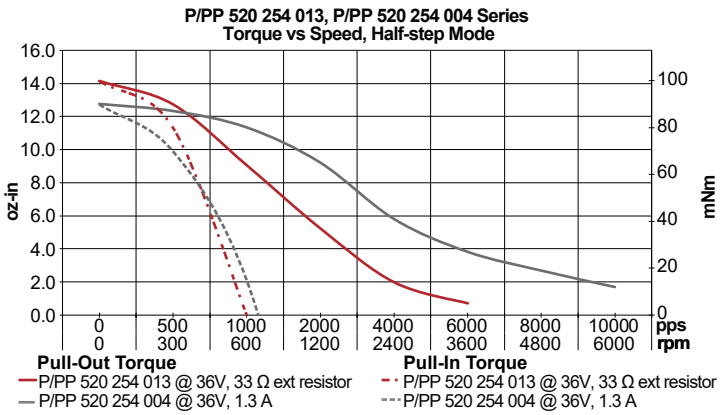

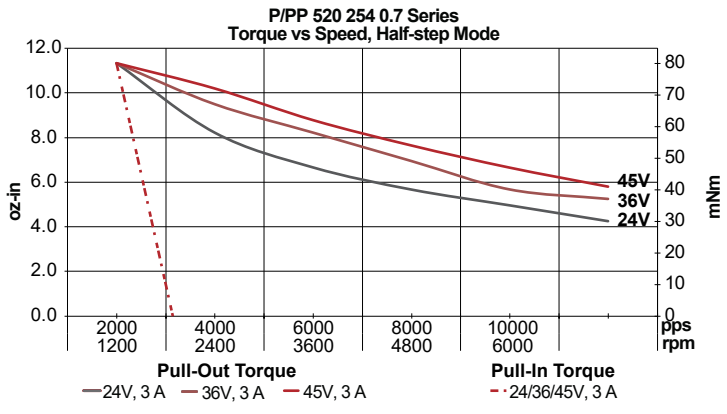

V092020 • © 2020 Portescap. Specifications subject to change without notice.

PP520

Ø 52 mm • 120 mNm

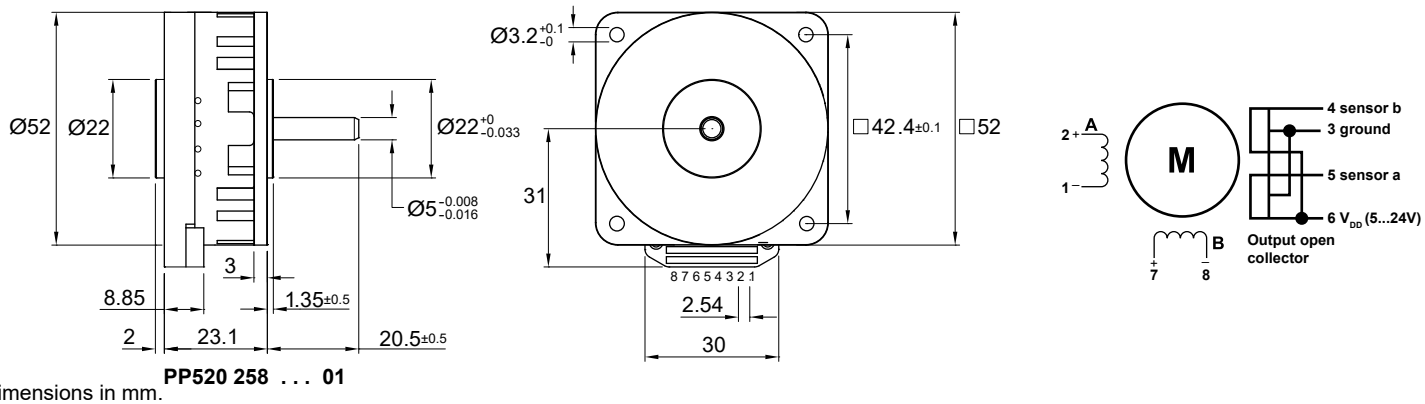

PP520 258 . . . 01

Dimensions in mm.

Electrical Data	PP520 258 013 01	PP520 258 004 01	PP520 258 0.7 01	Unit
1 Resistance per Phase, typ	13.5	4.4	0.7	Ohms
2 Inductance per Phase, typ	27.0	8.0	1.3	mH
3 Nominal Phase Current (2 ph. On)	0.50	0.90	2.30	A
4 Nominal Phase Current (1 ph. On)	0.75	1.30	3.30	A
5 Back EMF Amplitude	9.80	5.50	2.10	V/kstep/s

General Data		
6 Holding Torque, nominal current	120 (17)	mNm (oz-in)
7 Holding Torque, 1.5x nominal current (1)	170 (24)	mNm (oz-in)
8 Detent Torque	18 (2.55)	mNm (oz-in)
9 Rotor Inertia	12.000	$kgm^2 \times 10^{-7}$
10 Step Angle	3.6	Degree
11 Absolute Accuracy 2 ph. On, Full step mode	+/- 5%	% Full Step
12 Steps Per Revolution	100	
13 Ambient Temperature Range (operating)	-20 to 50 (-4 to 122)	°C (°F)
14 Maximum Coil Temperature	130 (266)	°C (°F)
15 Thermal Resistance Coil-ambient (2)	9.5	°C/W
16 Natural Resonance Frequency (nominal current)	250	Hz
17 Electrical Time Constant	1.80	ms
18 Angular Acceleration (nominal current)	100,000	rad/s^2
19 Bearing Type	Ball	
20 Dielectric Withstanding Voltage	500 VRMS for 5 seconds	VAC
21 Radial Shaft Play	15@5N	µm
22 Axial Shaft Play	10@5N	µm
23 Maximum Radial Shaft Load	20 (72)	N (oz)
24 Maximum Axial Shaft Load (3)	30 (108)	N (oz)
25 Weight	180 (6.3)	g (oz)
26 Power Rate (nominal current)	12.0	kW/s

Notes:
1. Measured with 1 phase ON. The max coil temperature must be respected
2. Motor unmounted
3. Shaft must be supported when press-fitting a pulley or pinion

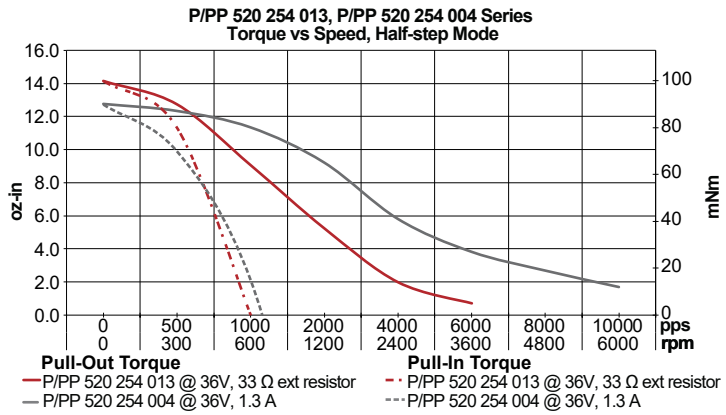

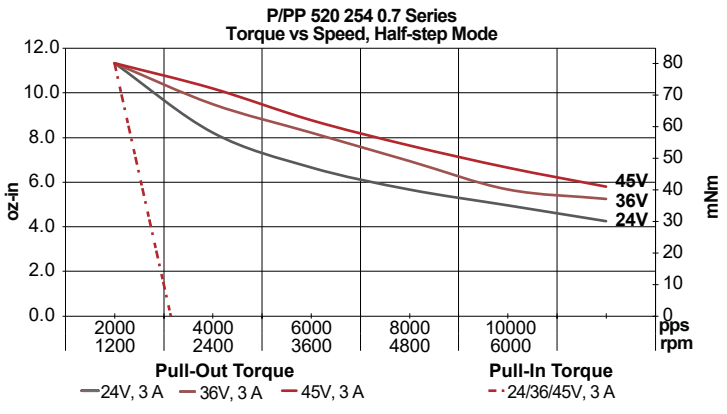

P532

Ø 52 mm • 205 mNm

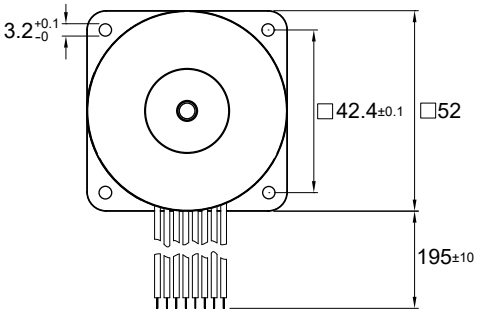

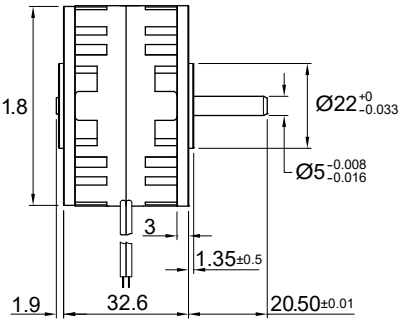

P532 258 . . . 10

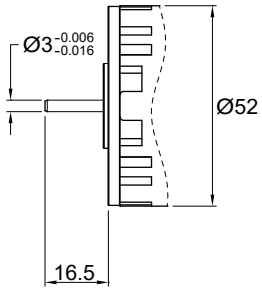

P532 258 . . . 84

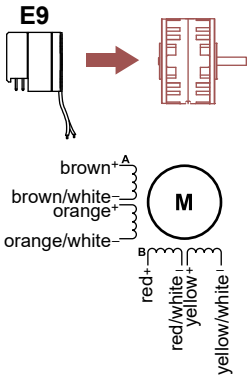

Dimensions in mm.

Electrical Data	P532 258 012 10/84 (series)	P532 258 004 10/84 (series)	P532 258 004 10/84 (parallel)	P532 258 0.7 10/84 (parallel)	Unit
1 Resistance per Phase, typ	27.0	8.8	2.2	0.35	Ohms
2 Inductance per Phase, typ	64.0	20.0	5.0	0.70	mH
3 Nominal Phase Current (2 ph. On)	0.40	0.70	1.40	3.70	A
4 Nominal Phase Current (1 ph. On)	0.56	1.00	2.00	5.20	A
5 Back EMF Amplitude	21.00	12.00	6.00	2.30	V/kstep/s

General Data		
6 Holding Torque, nominal current	205 (29)	mNm (oz-in)
7 Holding Torque, 1.5x nominal current (1)	300 (42.5)	mNm (oz-in)
8 Detent Torque	40 (5.67)	mNm (oz-in)
9 Rotor Inertia	12.000	$kgm^2 \times 10^{-7}$
10 Step Angle	3.6	Degree
11 Absolute Accuracy 2 ph. On, Full step mode	+/- 5%	% Full Step
12 Steps Per Revolution	100	
13 Ambient Temperature Range (operating)	-20 to 50 (-4 to 122)	°C (°F)
14 Maximum Coil Temperature	130 (266)	°C (°F)
15 Thermal Resistance Coil-ambient (2)	7.3	°C/W
16 Natural Resonance Frequency (nominal current)	330	Hz
17 Electrical Time Constant	2.30	ms
18 Angular Acceleration (nominal current)	195,000	rad/s^2
19 Bearing Type	Ball	
20 Dielectric Withstanding Voltage	500 VRMS for 5 seconds	VAC
21 Radial Shaft Play	25@5N	µm
22 Axial Shaft Play	25@5N	µm
23 Maximum Radial Shaft Load	20 (72)	N (oz)
24 Maximum Axial Shaft Load (3)	30 (108)	N (oz)
25 Weight	250 (8.8)	g (oz)
26 Power Rate (nominal current)	35.0	kW/s

Notes:
1. Measured with 1 phase ON. The max coil temperature must be respected
2. Motor unmounted
3. Shaft must be supported when press-fitting a pulley or pinion

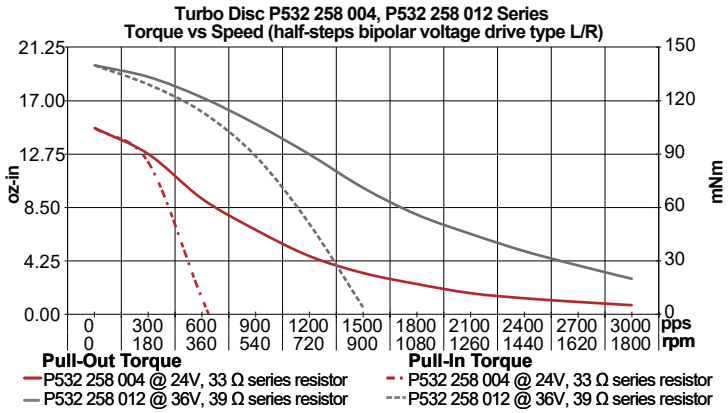

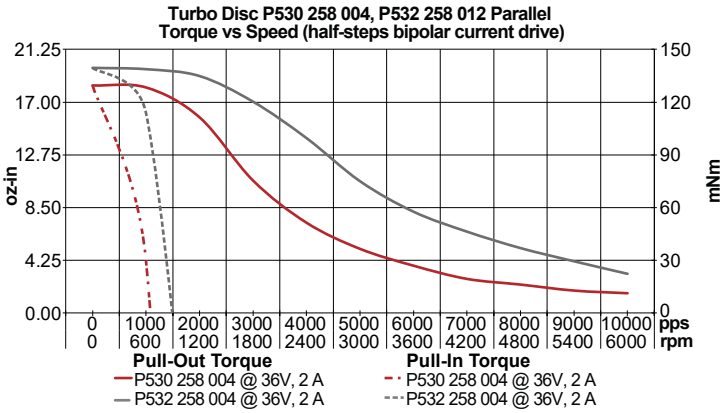

V092020 • © 2020 Portescap. Specifications subject to change without notice.

P532 with Encoder

Ø 52 mm • 205 mNm

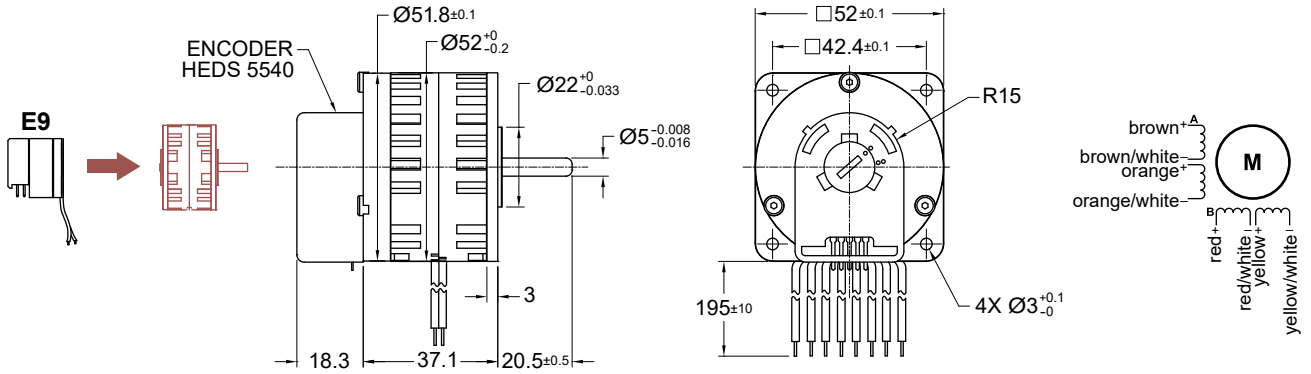

Dimensions in mm.

Electrical Data		P532 012 150 HEDS 5540 A11 (series)	P532 004 150 HEDS 5540 A11 (series)	P532 004 150 HEDS 5540 A11 (parallel)	P532 0.7 150 HEDS 5540 A11 (parallel)	Unit
1	Resistance per Phase, typ	27.0	8.80	2.20	0.31	Ohms
2	Inductance per Phase, typ	64.0	20.0	5.0	0.70	mH
3	Nominal Phase Current (2 ph. On)	0.40	0.70	1.40	3.74	A
4	Nominal Phase Current (1 ph. On)	0.56	1.00	2.00	5.29	A
5	Back EMF Amplitude	21.00	12.00	6.00	2.30	V/kstep/s

General Data			
6	Holding Torque, nominal current	205 (29)	mNm (oz-in)
7	Holding Torque, 1.5x nominal current (1)	300 (42.5)	mNm (oz-in)
8	Detent Torque	45 (6.4)	mNm (oz-in)
9	Rotor Inertia	13.0	$kgm^2 \times 10^{-7}$
10	Step Angle	3.6	Degree
11	Absolute Accuracy 2 ph. On, Full step mode	+/- 5%	% Full Step
12	Steps Per Revolution	100	
13	Ambient Temperature Range (operating)	-20 to 50 (-4 to 122)	°C (°F)
14	Maximum Coil Temperature	130 (266)	°C (°F)
15	Thermal Resistance Coil-ambient (2)	7.3	°C/W
16	Natural Resonance Frequency (nominal current)	350	Hz
17	Electrical Time Constant	2.30	ms
18	Angular Acceleration (nominal current)	171,000	rad/s^2
19	Bearing Type	Ball	
20	Dielectric Withstanding Voltage	500 VRMS for 5 seconds	VAC
21	Radial Shaft Play	25@5N	µm
22	Axial Shaft Play	25@5N	µm
23	Maximum Radial Shaft Load	20 (72)	N (oz)
24	Maximum Axial Shaft Load (3)	30 (108)	N (oz)
25	Weight	260 (9.2)	g (oz)
26	Power Rate (nominal current)	35.0	kW/s

Notes:
1. Measured with 1 phase ON. The max coil temperature must be respected
2. Motor unmounted
3. Shaft must be supported when press-fitting a pulley or pinion
4. For encoder specification, please refer to the dedicated encoder catalog page for HEDS 5540

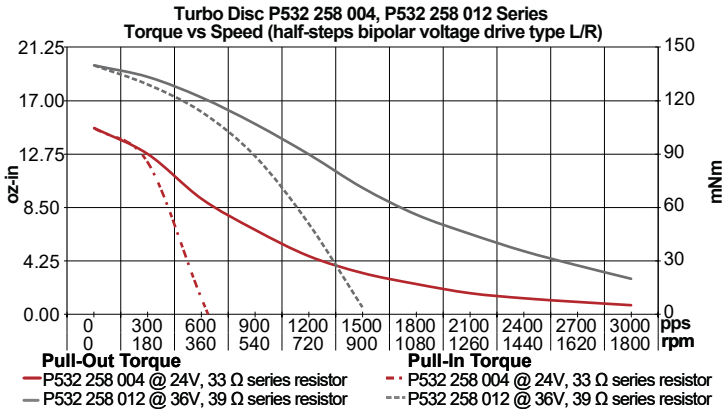

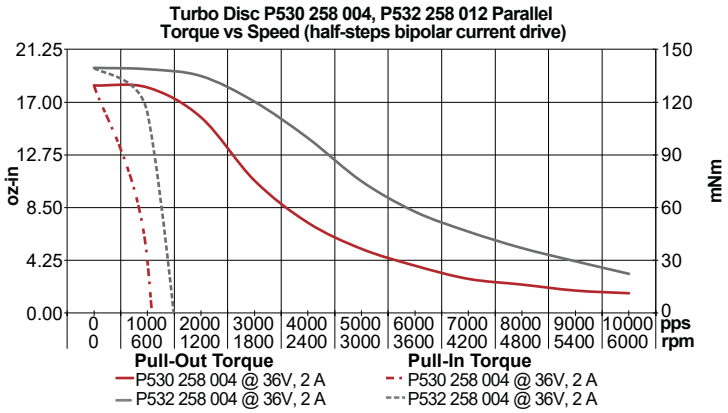

P760 with Encoder

Ø 74 mm • 325 mNm

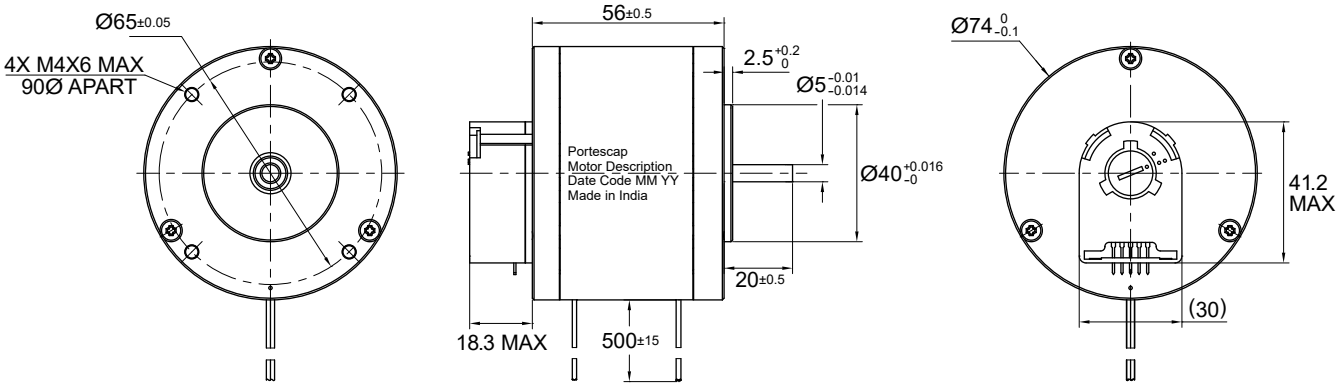

Dimensions in mm.

Electrical Data	P760 0.4 05 HEDS 5540 A11	Unit
1 Resistance per Phase, typ	0.4	Ohms
2 Inductance per Phase, typ	2.1	mH
3 Nominal Phase Current (2 ph. On)	4.30	A
4 Nominal Phase Current (1 ph. On)	6.00	A
5 Back EMF Amplitude	7.10	V/kstep/s
General Data		
6 Holding Torque, nominal current	325 (46)	mNm (oz-in)
7 Holding Torque, 1.5x nominal current (1)	485 (68.7)	mNm (oz-in)
8 Detent Torque	20 (2.8)	mNm (oz-in)
9 Rotor Inertia	17	$kgm^2 \times 10^{-7}$
10 Step Angle	7.5	Degree
11 Absolute Accuracy 2 ph. On, Full step mode	+/- 5%	% Full Step
12 Steps Per Revolution	48	
13 Ambient Temperature Range (operating)	-20 to 50 (-4 to 122)	°C (°F)
14 Maximum Coil Temperature	130 (266)	°C (°F)
15 Thermal Resistance Coil-ambient (2)	5	°C/W
16 Natural Resonance Frequency (nominal current)	240	Hz
17 Electrical Time Constant	4.70	ms
18 Angular Acceleration (nominal current)	190,000	rad/s^2
19 Bearing Type	Ball	
20 Dielectric Withstanding Voltage	500 VRMS for 5 seconds	VAC
21 Radial Shaft Play	25@5N	µm
22 Axial Shaft Play	25@5N	µm
23 Maximum Radial Shaft Load	20 (72)	N (oz)
24 Maximum Axial Shaft Load (3)	30 (108)	N (oz)
25 Weight	700 (25)	g (oz)
26 Power Rate (nominal current)	58.0	kW/s

Notes:
1. Measured with 1 phase ON. The max coil temperature must be respected
2. Motor unmounted
3. Shaft must be supported when press-fitting a pulley or pinion

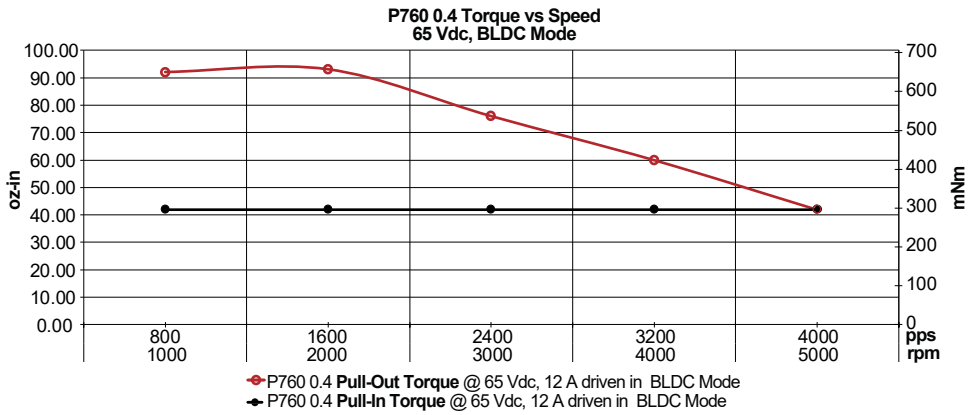

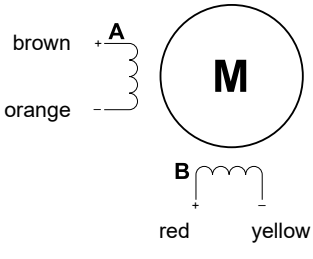

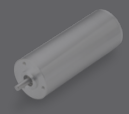
Brushless dc motors

Brush dc motors

Disc magnet motors

Can stack motors

Can stack linear actuators

Gearheads
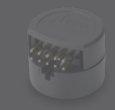
Encoders

Can Stack Motors

These stepper motors eliminate the need for closed-loop feedback, providing accurate positioning in steps that typically range from 3.6 to 18 degrees (100 to 20 steps per revolution). Our can stack motors are the simplest motion solution for a wide range of applications that require high continuous motor torque but don't require the absolute positioning of a servo system.

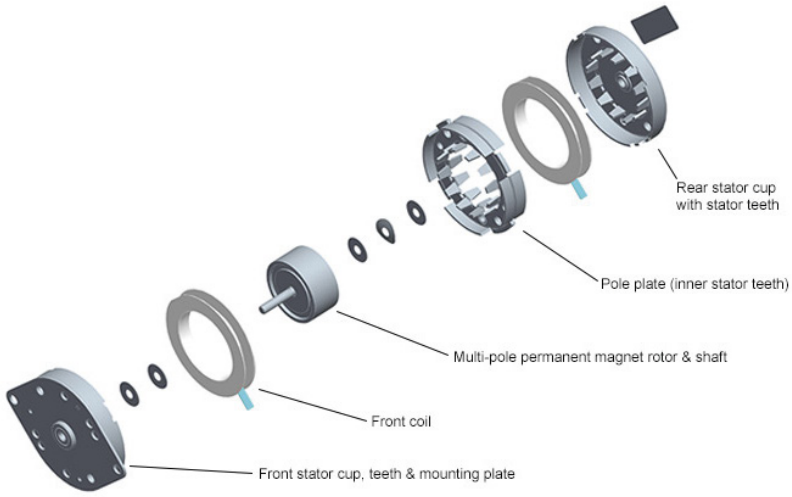

Simple, Cost-Effective, Accurate Positioning

Feature	Details	Application Advantages
Stepper motor design	• No need for encoder feedback	• Simple open-loop positioning that can be digitally controlled
Step angle variation: 3.6° to 18°	• Designed to accommodate coarse to fine mechanical resolution	• Flexibility to meet most application positioning requirements
Simple construction	• Basic mechanical design with proven performance • No brushes to replace	• Compact, reliable, cost-effective motion control
Radially magnetized permanent magnet rotor	• High torque-to-size ratio	• Design flexibility • Overall reduction in machine size
Bobbin wound coil design	• Unpiolar/bipolar windings designed for optimum performance	• Exceptionally efficient motor output for power input
Sintered bronze bearing design, Ball bearings optional	• Long bearing and lubrication life • Choice of bearing performance characteristics	• Increased service life and reliability for any application

A Classic Design with Wide-Ranging Application

Medical devices & clinical diagnostics
- Laboratory automation
- Infusion systems
- Diagnostic analyzers
- Miniature pumps
- Pipettes

Instrumentation
- Dosing & dispensing systems
- Gas detection
- Land surveying
- Microscopes

Security
- Access systems
- Camera positioning

Other
- Damper actuation
- Valve actuation

Meet your Application's Working Point Requirements

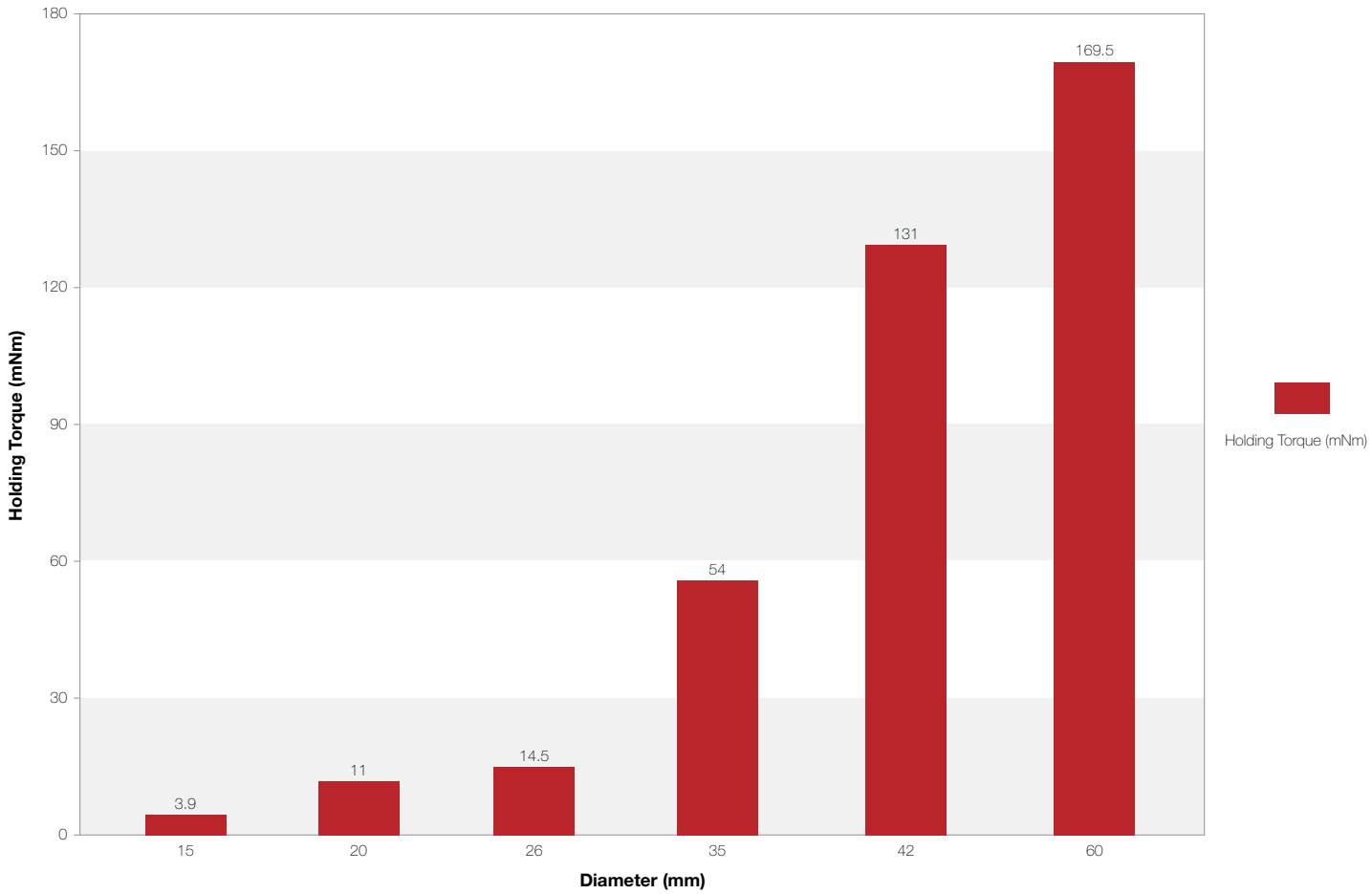

For complete product and application details, visit **portescap.com/can-stack**

15M020D

Ø 15 mm • RoHS Compliant • 3.87 mNm

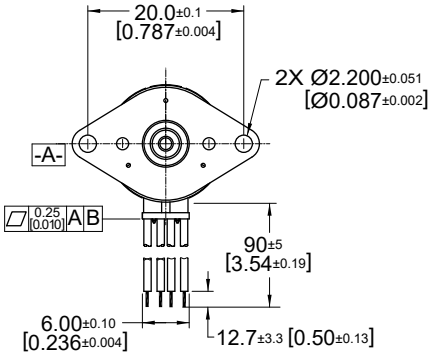

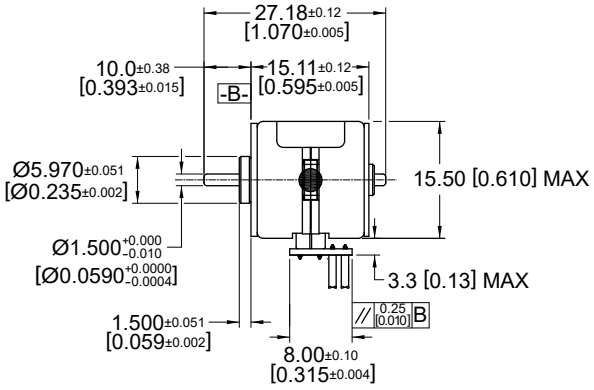

Dimensions in mm. [inches]

Electrical Data		15M020D•• 1B Bipolar	Unit
1	Operating Voltage	5	VDC
2	Resistance per Phase, ± 10%	40.0	Ohms
3	Inductance per Phase, typ	14.0	mH
4	Rated Current per Phase *	0.13	A
Coil Independent Parameters			
5	Holding Torque, MIN *	3.87 (0.55)	mNm (oz-in)
6	Detent Torque, Max	1.62 (0.23)	mNm (oz-in)
7	Rotor Inertia	0.115 (0.00063)	gcm² (oz-in²)
8	Step Angle	18.0	Degree
9	Absolute accuracy 2 ph. On, Full step	± 1.5	Degree
10	Steps per Revolution	20	
11	Ambient Temp Range (operating)	-20 to +70 (-4 to +158)	°C (°F)
12	Maximum Coil Temperature	130 (266)	°C (°F)
13	Bearing Type	Sintered Bronze Sleeve	
14	Insulation Resistance at 500 VDC	100	Mohms
15	Dielectric Withstanding Voltage	450 VRMS for 2 Seconds	VAC
16	Weight	14 (0.5)	g (oz)
17	Leadwire	AWG #28, UL1429 (80° C, 150 V)	

Note: All motor data values at 20° C unless otherwise specified

* Engergize at rated current, 2-Phase On

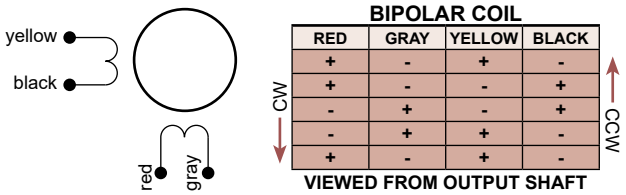

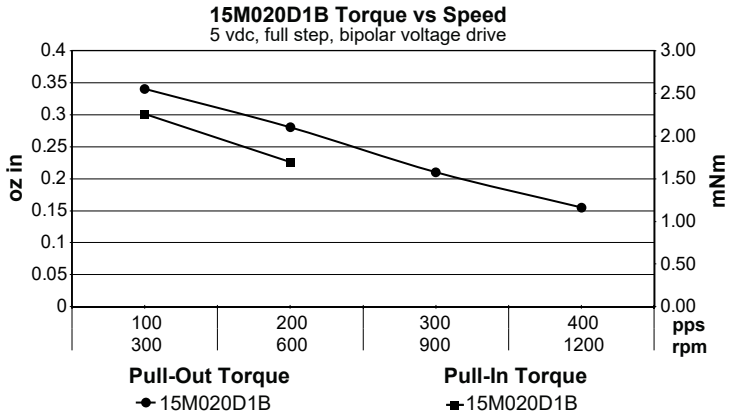

V092020 • © 2020 Portescap. Specifications subject to change without notice.

20M020D

Ø 20 mm • RoHS Compliant • 11 mNm

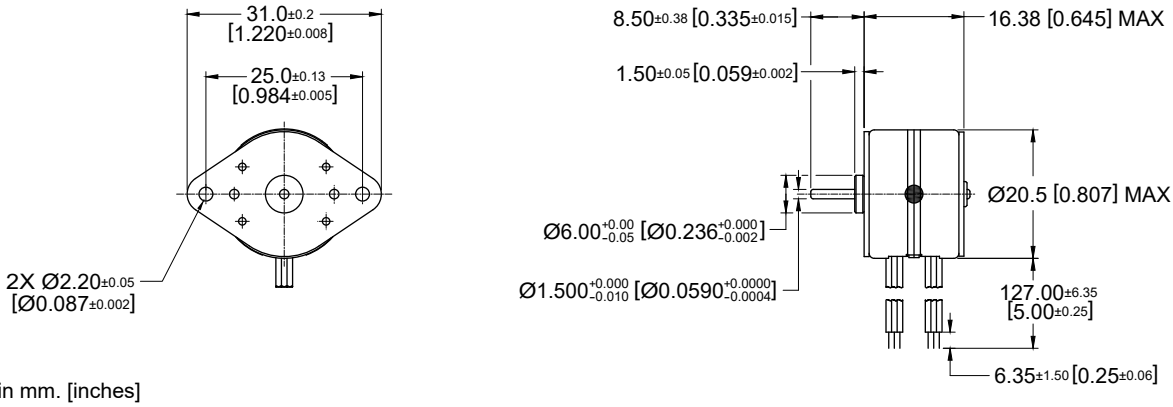

Dimensions in mm. [inches]

Electrical Data	20M020D•• 1U Unipolar	2U Unipolar	1B Bipolar	2B Bipolar	Unit
1 Operating Voltage	5	12	5	12	VDC
2 Resistance per Phase, ± 10%	20.0	115.2	20.0	115.2	Ohms
3 Inductance per Phase, typ	3.9	20.3	7.8	52.8	mH
4 Rated Current per Phase *	0.25	0.10	0.25	0.10	A
Coil Independent Parameters					
5 Holding Torque, MIN *	7.8 (1.11)	7.8 (1.11)	11.0 (1.56)	11.0 (1.56)	mNm (oz-in)
6 Detent Torque, Max	3.53 (0.5)				mNm (oz-in)
7 Rotor Inertia	0.41 (0.00224)				gcm² (oz-in²)
8 Step Angle	18.0				Degree
9 Absolute accuracy 2 ph. On, Full step	± 1.5				Degree
10 Steps per Revolution	20				
11 Ambient Temp Range (operating)	-20 to +70 (-4 to +158)				°C (°F)
12 Maximum Coil Temperature	130 (266)				°C (°F)
13 Bearing Type	Sintered Bronze Sleeve				
14 Insulation Resistance at 500 VDC	100				Mohms
15 Dielectric Withstanding Voltage	450 VRMS for 2 seconds				VAC
16 Weight	23.5 (0.832)				g (oz)
17 Leadwire	AWG 28, UL 1429				

Note: All motor data values at 20° C unless otherwise specified
* Engergize at rated current, 2-Phase On

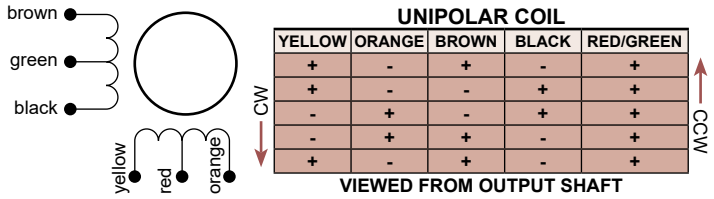

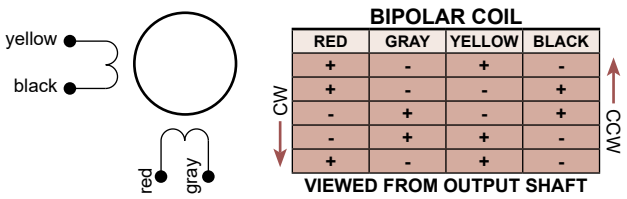

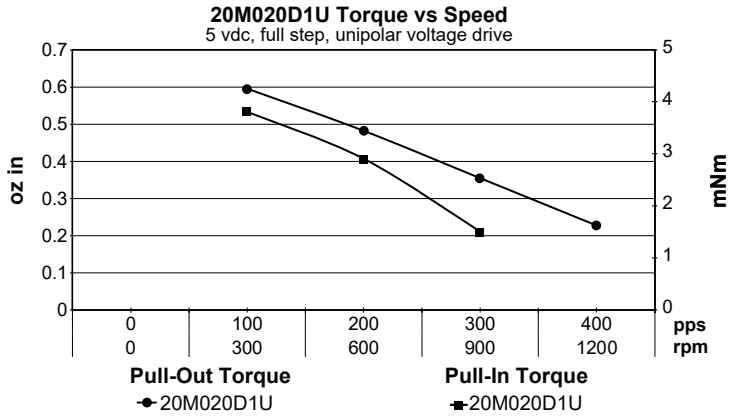

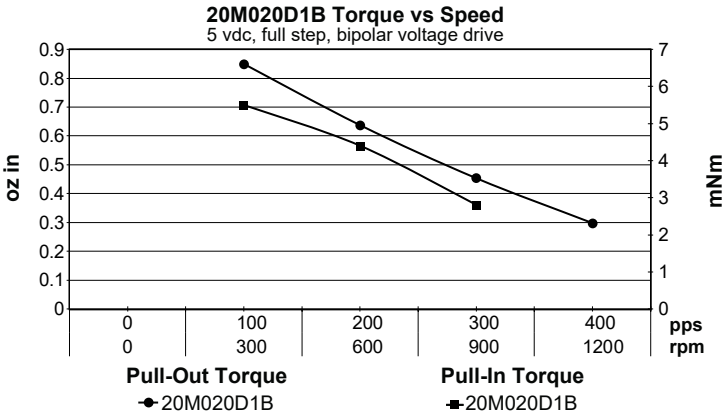

26M024B

Ø 26 mm • RoHS Compliant • 7.8 mNm

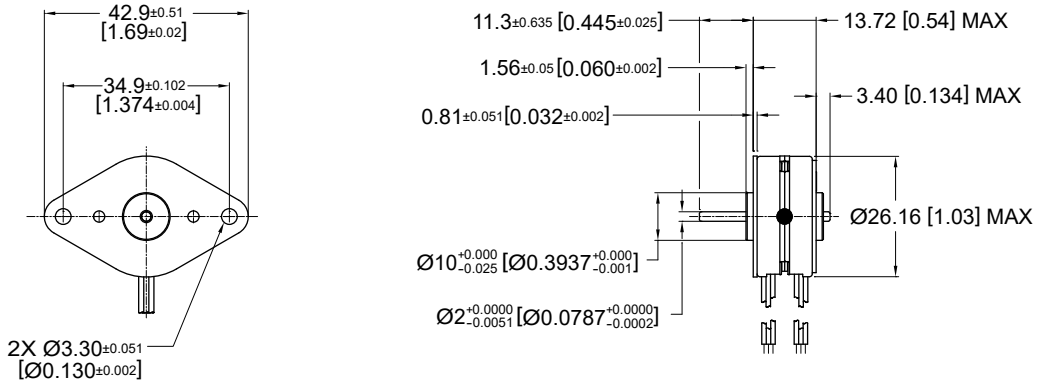

Dimensions in mm. [inches]

Electrical Data	26M024B•• 1U Unipolar	2U Unipolar	1B Bipolar	2B Bipolar	Unit
1 Operating Voltage	5	12	5	12	VDC
2 Resistance per Phase, ± 10%	19.6	110.0	19.8	108.0	Ohms
3 Inductance per Phase, typ	4.1	29.9	7.7	52.4	mH
4 Rated Current per Phase *	0.26	0.11	0.25	0.11	A
Coil Independent Parameters					
5 Holding Torque, MIN *	6.3 (0.9)	6.3 (0.9)	7.8 (1.1)	7.8 (1.1)	mNm (oz-in)
6 Detent Torque, Max	1.34 (0.19)				mNm (oz-in)
7 Rotor Inertia	1.1 (0.00601)				gcm² (oz-in²)
8 Step Angle	15.0				Degree
9 Absolute accuracy 2 ph. On, Full step	± 1				Degree
10 Steps per Revolution	24				
11 Ambient Temp Range (operating)	-20 to +70 (-4 to +158)				°C (°F)
12 Maximum Coil Temperature	130 (266)				°C (°F)
13 Bearing Type	Sintered Bronze Sleeve				
14 Insulation Resistance at 500 VDC	100				Mohms
15 Dielectric Withstanding Voltage	650 for 2 seconds				VAC
16 Weight	34 (1.2)				g (oz)
17 Leadwire	AWG #28, UL1429 (80° C, 150 V)				

Note: All motor data values at 20° C unless otherwise specified

* Engergize at rated current, 2-Phase On

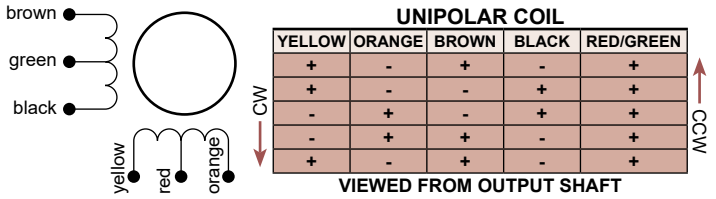

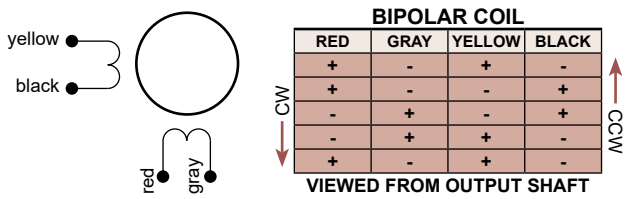

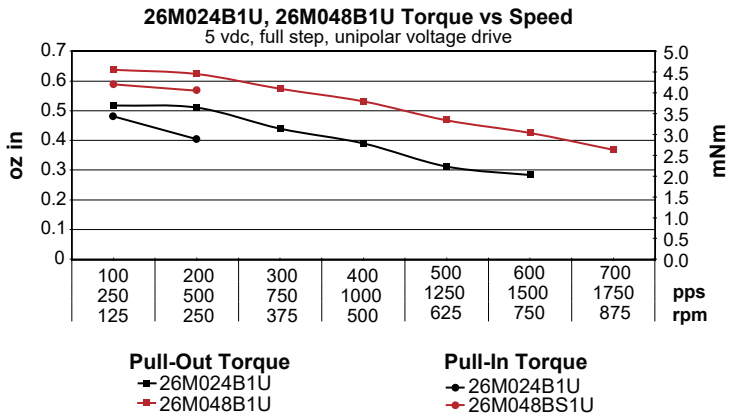

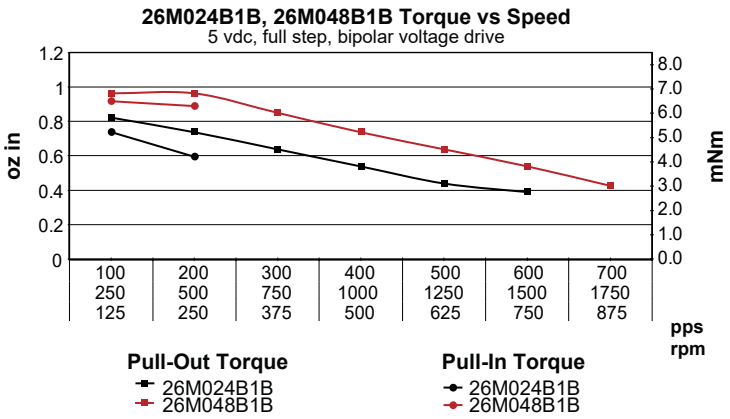

V092020 • © 2020 Portescap. Specifications subject to change without notice.

26M024D

Ø 26 mm • RoHS Compliant • 12 mNm

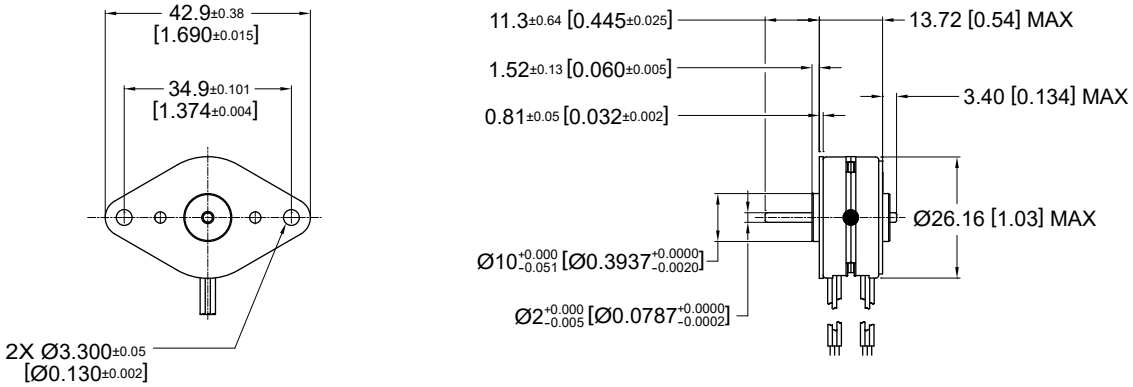

Dimensions in mm. [inches]

Electrical Data	26M024D•• 1U Unipolar	2U Unipolar	1B Bipolar	2B Bipolar	Unit
1 Operating Voltage	5	12	5	12	VDC
2 Resistance per Phase, ± 10%	19.6	110.0	19.8	108.0	Ohms
3 Inductance per Phase, typ	3.8	26.6	9.0	44.3	mH
4 Rated Current per Phase *	0.26	0.11	0.25	0.11	A
Coil Independent Parameters					
5 Holding Torque, MIN *	9.5 (1.35)	9.5 (1.35)	12 (1.7)	12 (1.7)	mNm (oz-in)
6 Detent Torque, Max	4.2 (0.6)				mNm (oz-in)
7 Rotor Inertia	1.1 (0.00601)				gcm² (oz-in²)
8 Step Angle	15.0				Degree
9 Absolute accuracy 2 ph. On, Full step	± 1				Degree
10 Steps per Revolution	24.0				
11 Ambient Temp Range (operating)	-20 to +70 (-4 to +158)				°C (°F)
12 Maximum Coil Temperature	130 (266)				°C (°F)
13 Bearing Type	Sintered Bronze Sleeve				
14 Insulation Resistance at 500 VDC	100.0				Mohms
15 Dielectric Withstanding Voltage	650 VRMS for 2 seconds				VAC
16 Weight	34 (1.2)				g (oz)
17 Leadwire	AWG #28, UL 1429 (80° C, 150 V)				

Note: All motor data values at 20° C unless otherwise specified

* Engergize at rated current, 2-Phase On

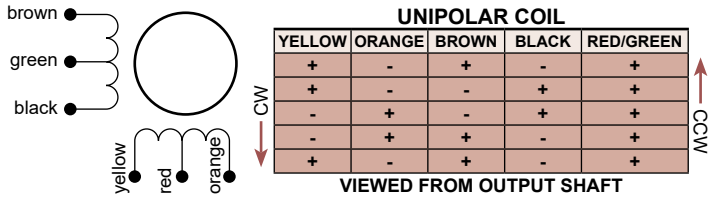

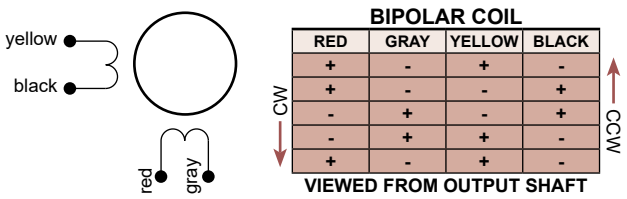

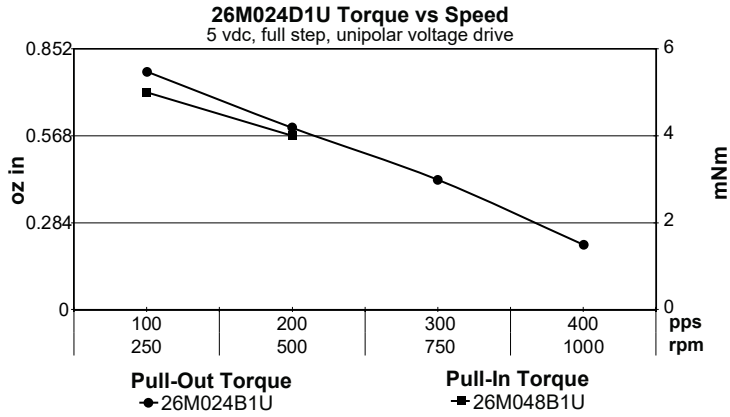

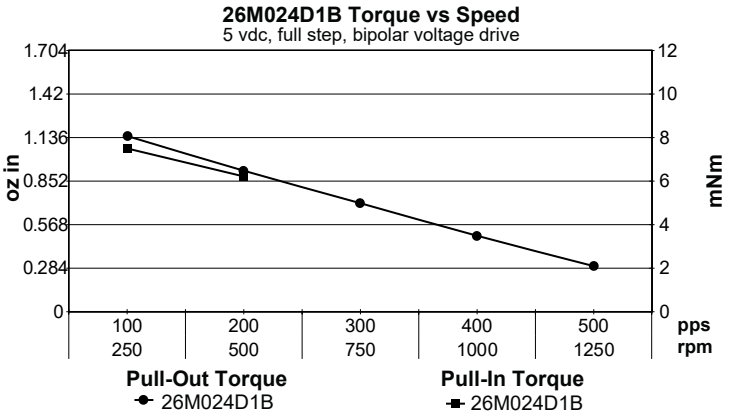

26M048B

Ø 26 mm • RoHS Compliant • 10.6 mNm

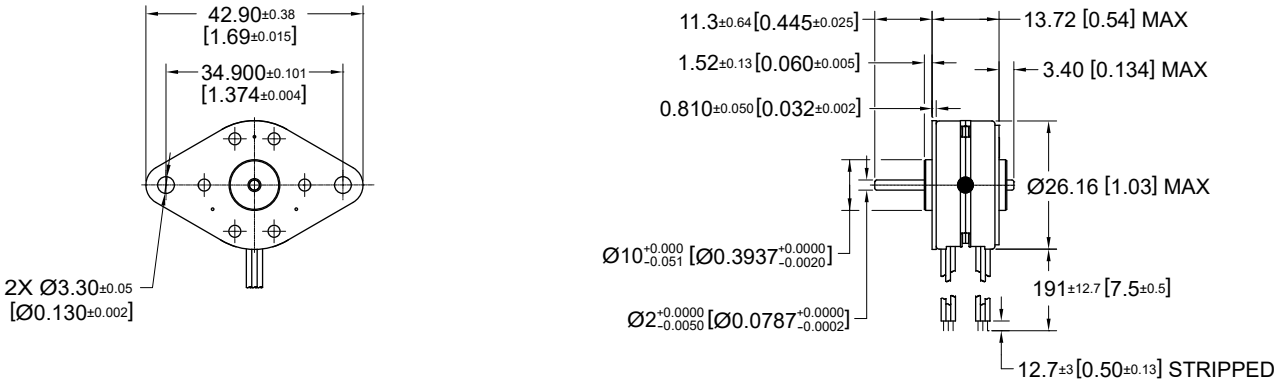

Dimensions in mm. [inches]

Electrical Data	26M048B•• 1U Unipolar	2U Unipolar	1B Bipolar	2B Bipolar	Unit
1 Operating Voltage	5	12	5	12	VDC
2 Resistance per Phase, ± 10%	19.6	110.0	19.8	108.0	Ohms
3 Inductance per Phase, typ	5.3	36.5	13.0	60.7	mH
4 Rated Current per Phase *	0.26	0.11	0.25	0.11	A
Coil Independent Parameters					
5 Holding Torque, MIN *	9.2 (1.3)	9.2 (1.3)	10.6 (1.5)	10.6 (1.5)	mNm (oz-in)
6 Detent Torque, Max	0.85 (0.12)				mNm (oz-in)
7 Rotor Inertia	1.1 (0.00601)				gcm² (oz-in²)
8 Step Angle	7.5				Degree
9 Absolute accuracy 2 ph. On, Full step	± 0.5				Degree
10 Steps per Revolution	48.0				
11 Ambient Temp Range (operating)	-20 to +70 (-4 to +158)				°C (°F)
12 Maximum Coil Temperature	130 (266)				°C (°F)
13 Bearing Type	Sintered Bronze Sleeve				
14 Insulation Resistance at 500 VDC	100.0				Mohms
15 Dielectric Withstanding Voltage	650 VRMS for 2 seconds				VAC
16 Weight	34 (1.2)				g (oz)
17 Leadwire	AWG #28, UL1429 (80° C, 150 V)				

Note: All motor data values at 20° C unless otherwise specified

* Engergize at rated current, 2-Phase On

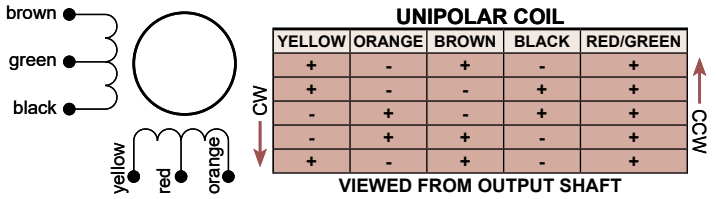

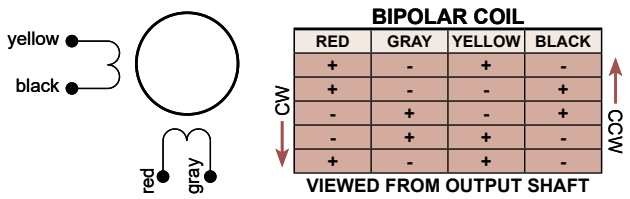

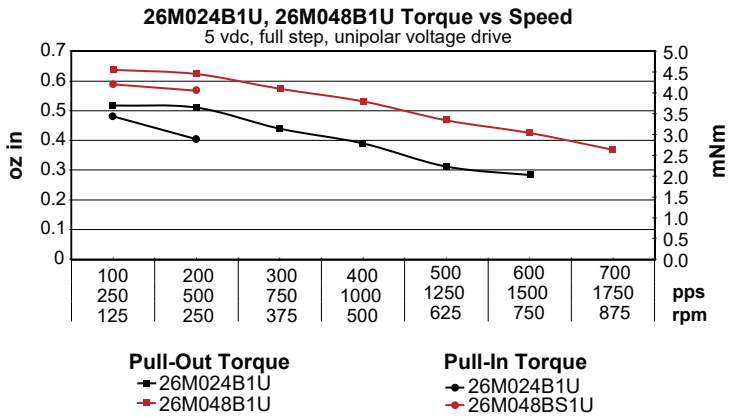

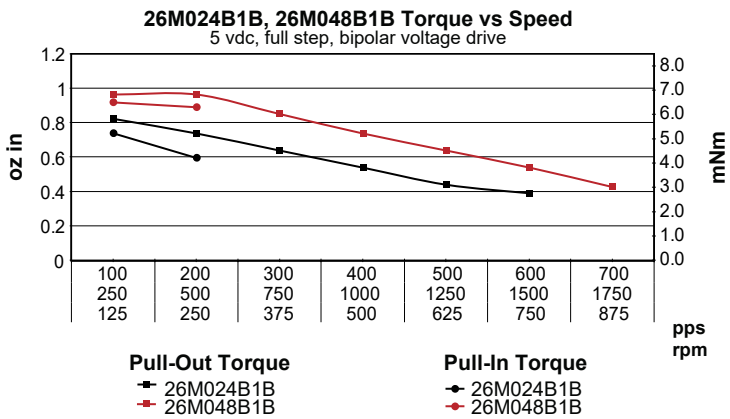

V092020 • © 2020 Portescap. Specifications subject to change without notice.

26M048D

Ø 26 mm • RoHS Compliant • 14.5 mNm

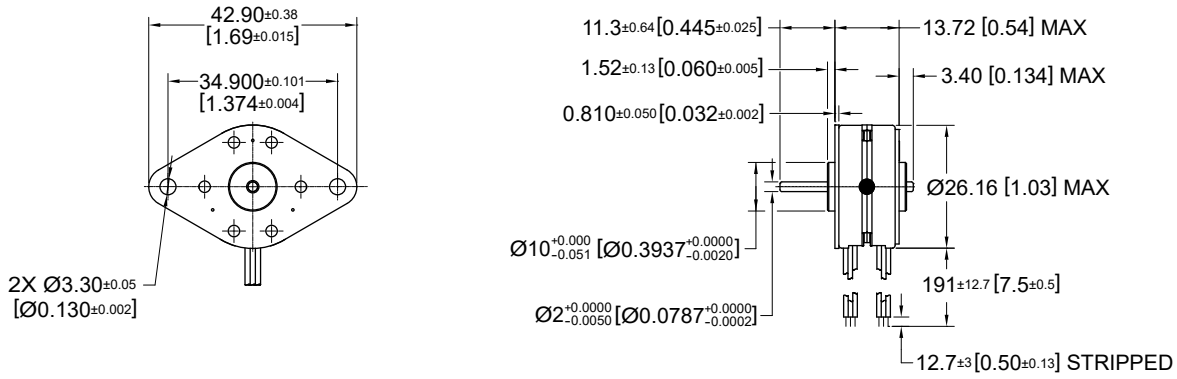

Dimensions in mm. [inches]

Electrical Data	26M048D•• 1U Unipolar	2U Unipolar	1B Bipolar	2B Bipolar	Unit
1 Operating Voltage	5	12	5	12	VDC
2 Resistance per Phase, ± 10%	19.6	110.0	19.8	108.0	Ohms
3 Inductance per Phase, typ	4.9	33.0	12.0	55.0	mH
4 Rated Current per Phase *	0.26	0.11	0.25	0.11	A
Coil Independent Parameters					
5 Holding Torque, MIN *	11.5 (1.63)	11.5 (1.63)	14.5 (2.05)	14.5 (2.05)	mNm (oz-in)
6 Detent Torque, Max	4.2 (0.6)				mNm (oz-in)
7 Rotor Inertia	1.1 (0.00601)				gcm² (oz-in²)
8 Step Angle	7.5				Degree
9 Absolute accuracy 2 ph. On, Full step	± 0.5				Degree
10 Steps per Revolution	48.0				
11 Ambient Temp Range (operating)	-20 to +70 (-4 to +158)				°C (°F)
12 Maximum Coil Temperature	130 (266)				°C (°F)
13 Bearing Type	Sintered Bronze Sleeve				
14 Insulation Resistance at 500 VDC	100.0				Mohms
15 Dielectric Withstanding Voltage	650 VRMS for 2 seconds				VAC
16 Weight	34 (1.2)				g (oz)
17 Leadwire	AWG #28, UL 1429 (80° C, 150 V)				

Note: All motor data values at 20° C unless otherwise specified
* Engergize at rated current, 2-Phase On

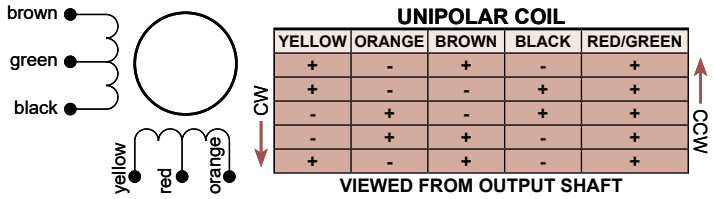

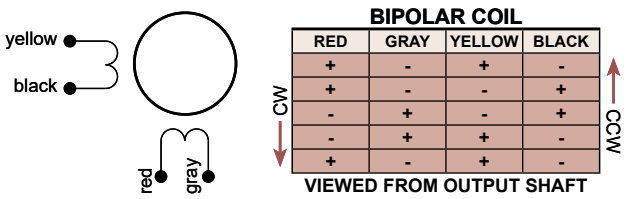

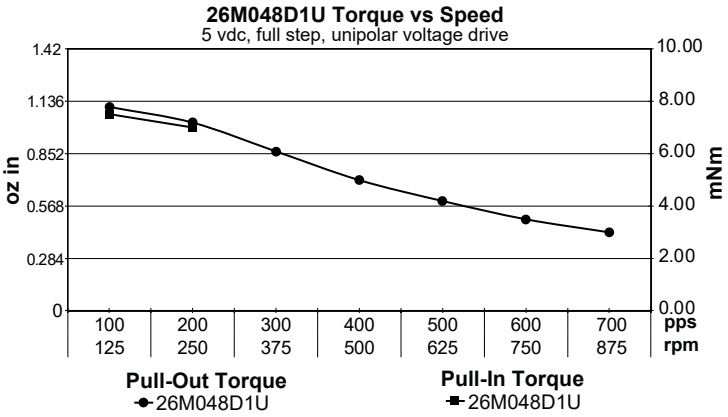

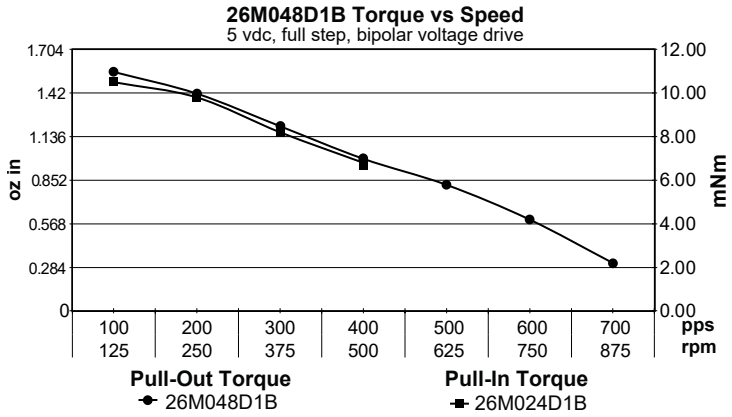

35L048B

Ø 35 mm • RoHS Compliant • 28 mNm

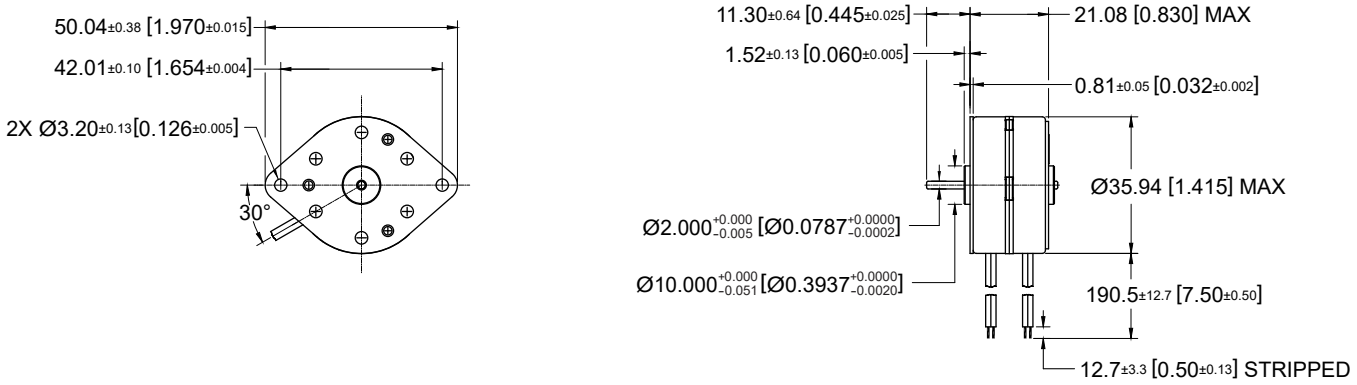

Dimensions in mm. [inches]

Electrical Data	35L048B•• 1U Unipolar	2U Unipolar	1B Bipolar	2B Bipolar	Unit
1 Operating Voltage	5	12	5	12	VDC
2 Resistance per Phase, ± 10%	11.0	64.0	11.0	64.0	Ohms
3 Inductance per Phase, typ	7.8	40.0	15.0	72.0	mH
4 Rated Current per Phase *	0.45	0.19	0.45	0.19	A
Coil Independent Parameters					
5 Holding Torque, MIN *	25 (3.5)	25 (3.5)	28 (4)	28 (4)	mNm (oz-in)
6 Detent Torque, Max	4.2 (0.6)				mNm (oz-in)
7 Rotor Inertia	4 (0.021)				gcm² (oz-in²)
8 Step Angle	7.5				Degree
9 Absolute accuracy 2 ph. On, Full step	± 0.5				Degree
10 Steps per Revolution	48.0				
11 Ambient Temp Range (operating)	-20 to +70 (-4 to +158)				°C (°F)
12 Maximum Coil Temperature	130 (266)				°C (°F)
13 Bearing Type	Sintered Bronze Sleeve				
14 Insulation Resistance at 500 VDC	100.0				Mohms
15 Dielectric Withstanding Voltage	650 VRMS for 2 seconds				VAC
16 Weight	88 (3.1)				g (oz)
17 Leadwire	AWG #26, UL1430 (105° C, 300 V)				

Note: All motor data values at 20° C unless otherwise specified

* Engergize at rated current, 2-Phase On

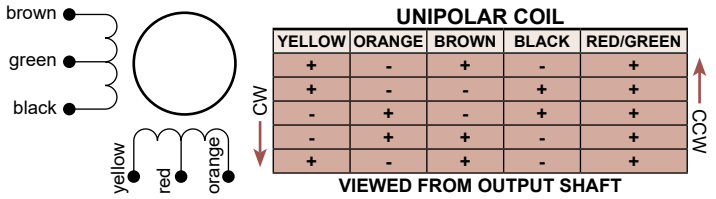

UNIPOLAR COIL

YELLOW	ORANGE	BROWN	BLACK	RED/GREEN	
+	-	+	-	+	
+	-	-	+	+	
-	+	-	+	+	
-	+	+	-	+	
+	-	+	-	+	

CW ↓ ↑ CCW

VIEWED FROM OUTPUT SHAFT

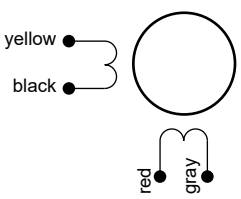

BIPOLAR COIL

RED	GRAY	YELLOW	BLACK	
+	-	+	-	
+	-	-	+	
-	+	-	+	
-	+	+	-	
+	-	+	-	

CW ↓ ↑ CCW

VIEWED FROM OUTPUT SHAFT

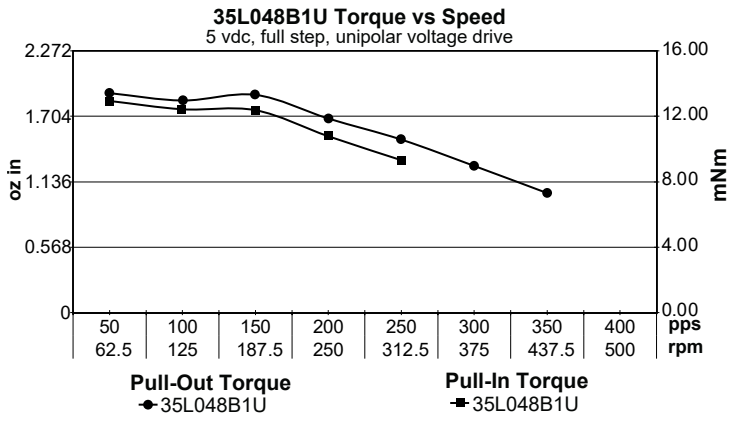

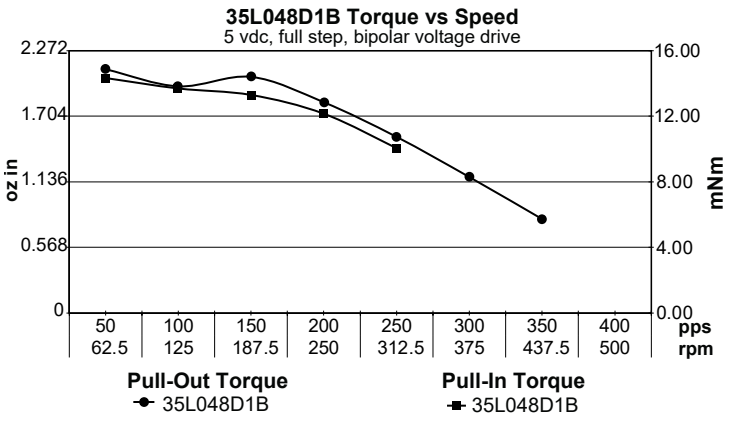

V092020 • © 2020 Portescap. Specifications subject to change without notice.

35L048D

Ø 35 mm • RoHS Compliant • 54 mNm

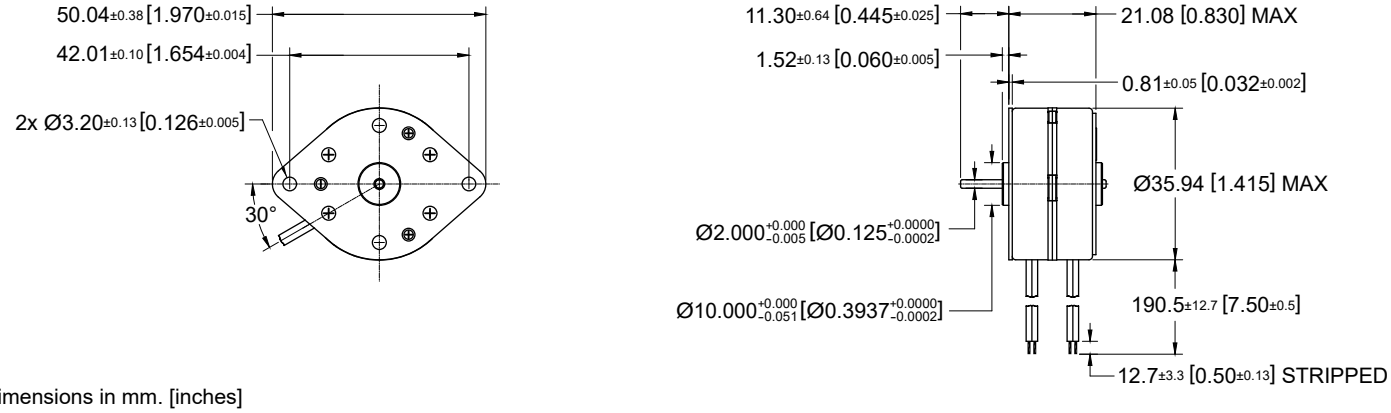

Dimensions in mm. [inches]

Electrical Data	35L048D•• 1U Unipolar	2U Unipolar	1B Bipolar	2B Bipolar	Unit
1 Operating Voltage	5	12	5	12	VDC
2 Resistance per Phase, ± 10%	11.0	64.0	11.0	64.0	Ohms
3 Inductance per Phase, typ	7.4	35.0	13.0	60.0	mH
4 Rated Current per Phase *	0.45	0.19	0.45	0.19	A
Coil Independent Parameters					
5 Holding Torque, MIN *	46 (6.5)	46 (6.5)	54 (7.6)	54 (7.6)	mNm (oz-in)
6 Detent Torque, Max	12.1 (1.8)				mNm (oz-in)
7 Rotor Inertia	4 (0.021)				gcm² (oz-in²)
8 Step Angle	7.5				Degree
9 Absolute accuracy 2 ph. On, Full step	± 0.5				Degree
10 Steps per Revolution	48.0				
11 Ambient Temp Range (operating)	-20 to +70 (-4 to +158)				°C (°F)
12 Maximum Coil Temperature	130 (266)				°C (°F)
13 Bearing Type	Sintered Bronze Sleeve				
14 Insulation Resistance at 500 VDC	100.0				Mohms
15 Dielectric Withstanding Voltage	650 VRMS for 2 seconds				VAC
16 Weight	88 (3.1)				g (oz)
17 Leadwire	AWG #26, UL1430 (105° C, 300 V)				

Note: All motor data values at 20° C unless otherwise specified

* Engergize at rated current, 2-Phase On

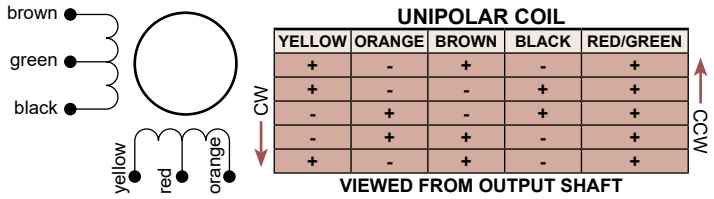

UNIPOLAR COIL

YELLOW	ORANGE	BROWN	BLACK	RED/GREEN
+	-	+	-	+
+	-	-	+	+
-	+	-	+	+
-	+	+	-	+
+	-	+	-	+

CW ↓ ↑ CCW

VIEWED FROM OUTPUT SHAFT

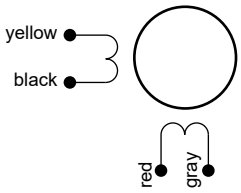

BIPOLAR COIL

RED	GRAY	YELLOW	BLACK
+	-	+	-
+	-	-	+
-	+	-	+
-	+	+	-
+	-	+	-

CW ↓ ↑ CCW

VIEWED FROM OUTPUT SHAFT

35L048D1U Torque vs Speed

5 vdc, full step, unipolar voltage drive

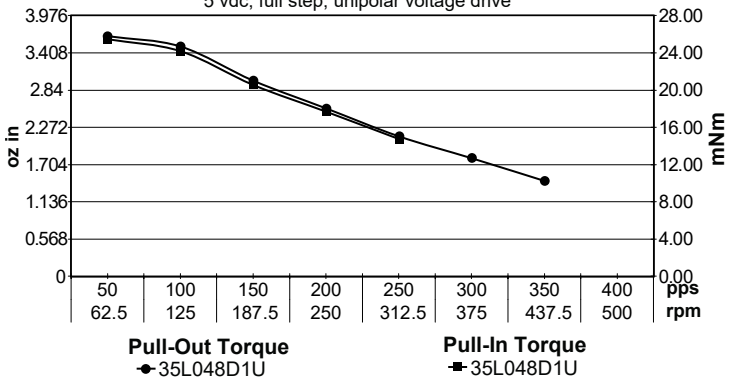

35L048D1B Torque vs Speed

5 vdc, full step, bipolar voltage drive

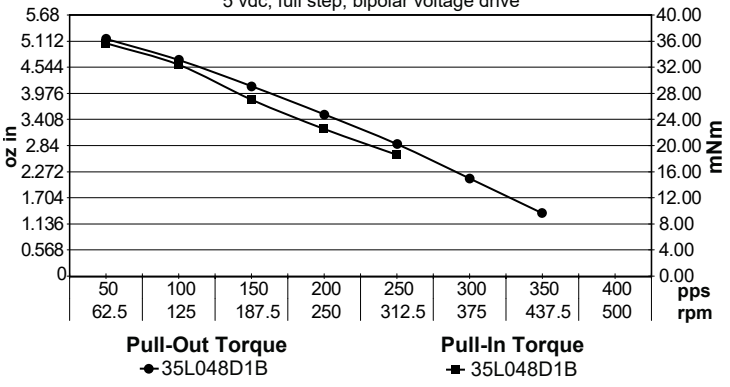

35M048B

Ø 35 mm • RoHS Compliant • 20 mNm

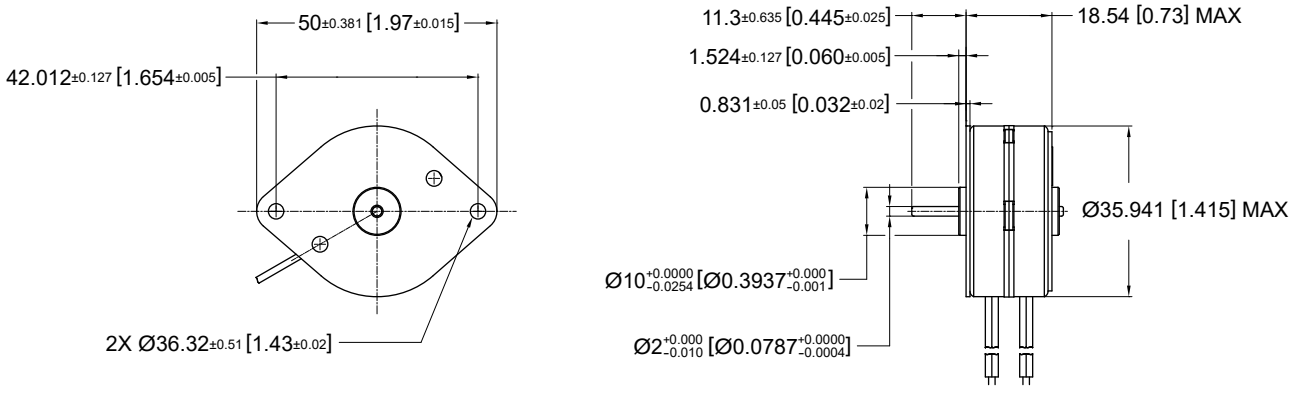

Dimensions in mm. [inches]

Electrical Data	35M048B•• 1U Unipolar	2U Unipolar	1B Bipolar	2B Bipolar	Unit
1 Operating Voltage	5	12	5	12	VDC
2 Resistance per Phase, ± 10%	12.5	72.0	12.5	72.0	Ohms
3 Inductance per Phase, typ	7.8	36.0	16.4	86.0	mH
4 Rated Current per Phase *	0.40	0.17	0.40	0.17	A
Coil Independent Parameters					
5 Holding Torque, MIN *	18.35 (2.6)	18.35 (2.6)	19.76 (2.8)	19.76 (2.8)	mNm (oz-in)
6 Detent Torque, Max	2.12 (0.3)				mNm (oz-in)
7 Rotor Inertia	2 (0.011)				gcm² (oz-in²)
8 Step Angle	7.5				Degree
9 Absolute accuracy 2 ph. On, Full step	± 0.5				Degree
10 Steps per Revolution	48.0				
11 Ambient Temp Range (operating)	-20 to +70 (-4 to +158)				°C (°F)
12 Maximum Coil Temperature	130 (266)				°C (°F)
13 Bearing Type	Sintered Bronze Sleeve				
14 Insulation Resistance at 500 VDC	100.0				Mohms
15 Dielectric Withstanding Voltage	650 VRMS for 2 seconds				VAC
16 Weight	88 (3.1)				g (oz)
17 Leadwire	AWG #26, UL1430 (105° C, 300 V)				

Note: All motor data values at 20° C unless otherwise specified

* Engergize at rated current, 2-Phase On

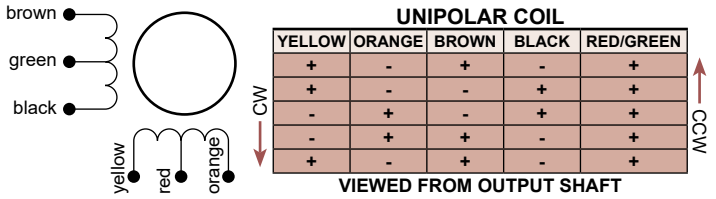

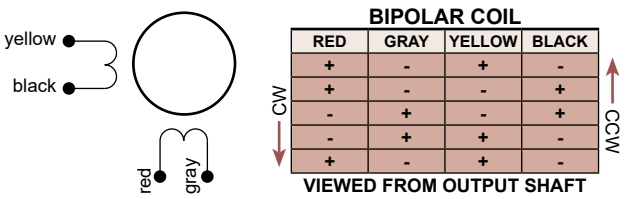

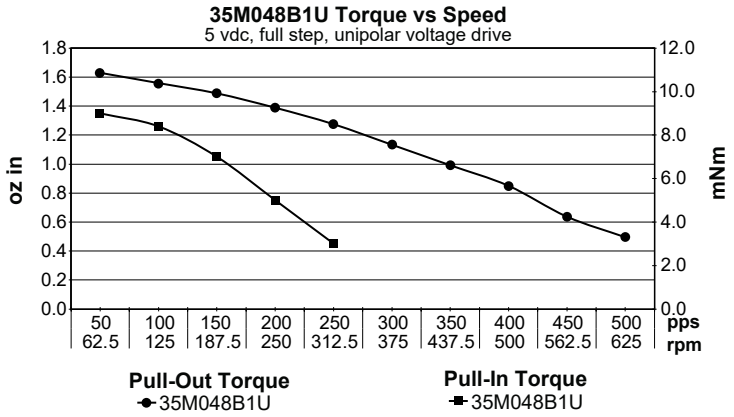

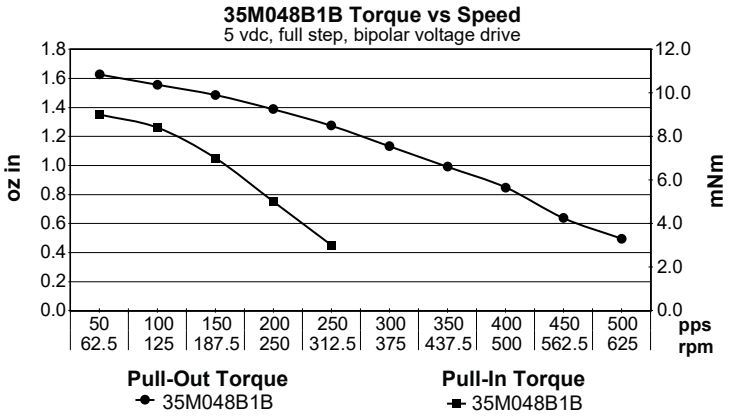

V092020 • © 2020 Portescap. Specifications subject to change without notice.

35M048D

Ø 35 mm • RoHS Compliant • 25 mNm

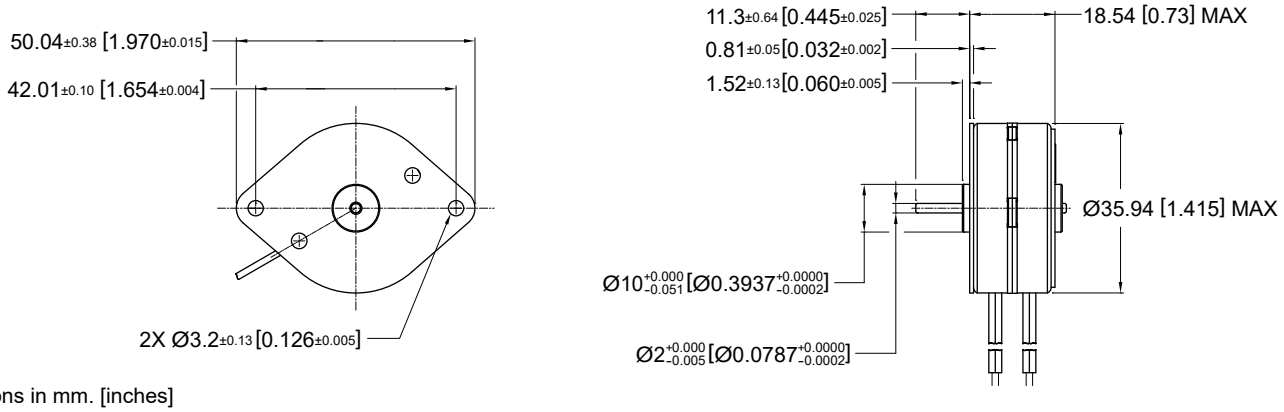

Dimensions in mm. [inches]

Electrical Data	35M048D•• 1U Unipolar	2U Unipolar	1B Bipolar	2B Bipolar	Unit
1 Operating Voltage	5	12	5	12	VDC
2 Resistance per Phase, ± 10%	12.5	72.0	12.5	72.0	Ohms
3 Inductance per Phase, typ	8.5	38.0	16.3	90.0	mH
4 Rated Current per Phase *	0.40	0.17	0.40	0.17	A
Coil Independent Parameters					
5 Holding Torque, MIN *	20 (2.8)	20 (2.8)	25 (3.5)	25 (3.5)	mNm (oz-in)
6 Detent Torque, Max	6.3 (0.89)				mNm (oz-in)
7 Rotor Inertia	2 (0.011)				gcm² (oz-in²)
8 Step Angle	7.5				Degree
9 Absolute accuracy 2 ph. On, Full step	± 0.5				Degree
10 Steps per Revolution	48.0				
11 Ambient Temp Range (operating)	-20 to +70 (-4 to +158)				°C (°F)
12 Maximum Coil Temperature	130 (266)				°C (°F)
13 Bearing Type	Sintered Bronze Sleeve				
14 Insulation Resistance at 500 VDC	100.0				Mohms
15 Dielectric Withstanding Voltage	650 VRMS for 2 seconds				VAC
16 Weight	88 (3.1)				g (oz)
17 Leadwire	AWG #26, UL1430 (105° C, 300 V)				

Note: All motor data values at 20° C unless otherwise specified
* Engergize at rated current, 2-Phase On

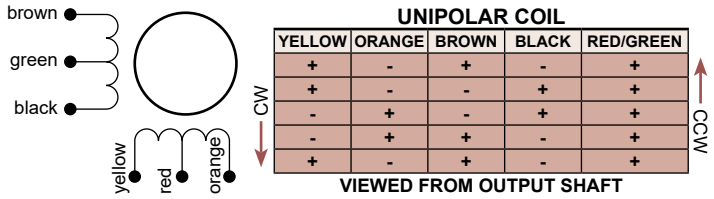

UNIPOLAR COIL

YELLOW	ORANGE	BROWN	BLACK	RED/GREEN
+	-	+	-	+
+	-	-	+	+
-	+	-	+	+
-	+	+	-	+
+	-	+	-	+

CW ↓ ↑ CCW

VIEWED FROM OUTPUT SHAFT

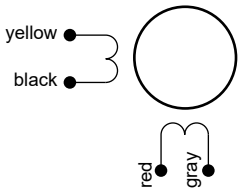

BIPOLAR COIL

RED	GRAY	YELLOW	BLACK
+	-	+	-
+	-	-	+
-	+	-	+
-	+	+	-
+	-	+	-

CW ↓ ↑ CCW

VIEWED FROM OUTPUT SHAFT

35M048D1U Torque vs Speed
5 vdc, full step, unipolar voltage drive

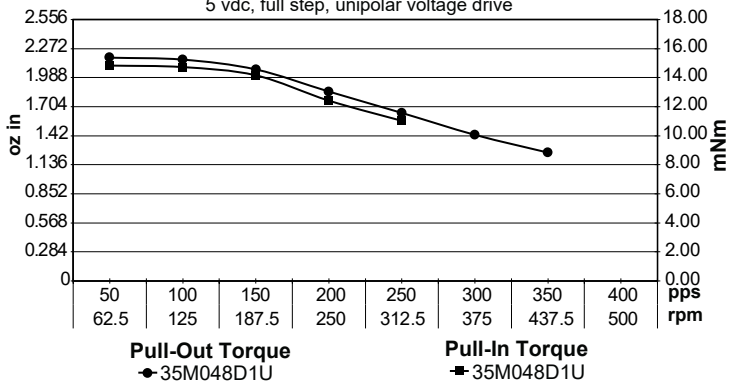

35M048D1B Torque vs Speed
5 vdc, full step, bipolar voltage drive

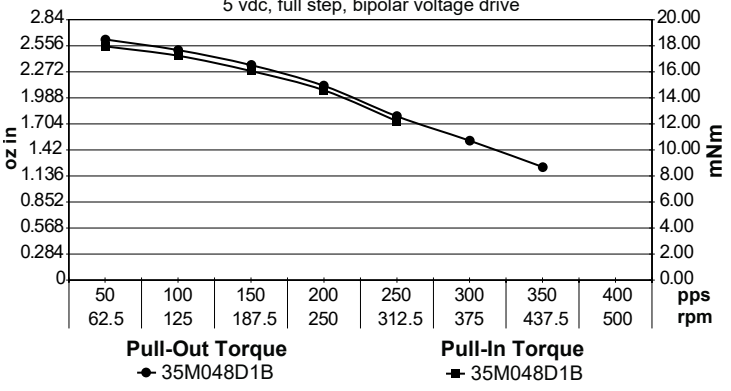

42L048D

Ø 42 mm • RoHS Compliant • 131 mNm

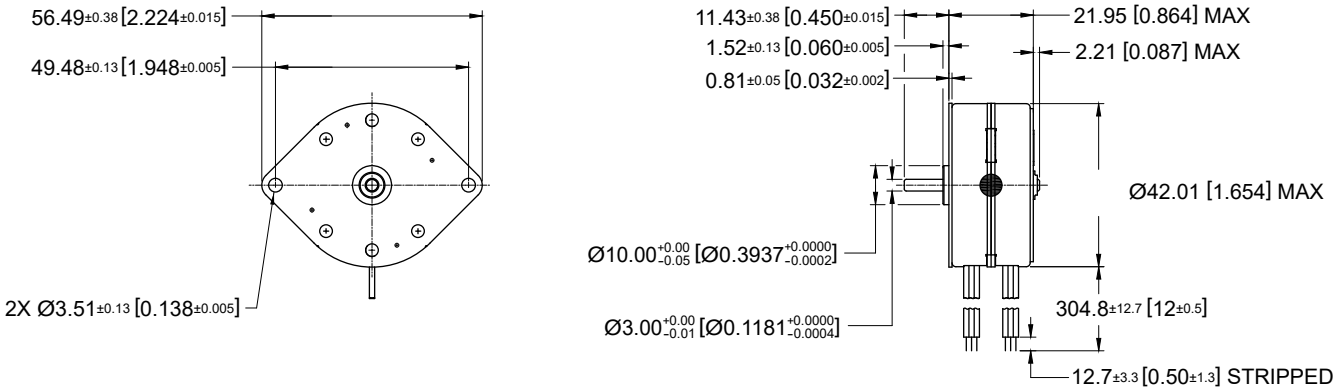

Dimensions in mm. [inches]

Electrical Data	42L048D•• 1U Unipolar	2U Unipolar	1B Bipolar	2B Bipolar	Unit
1 Operating Voltage	5	12	5	12	VDC
2 Resistance per Phase, ± 10%	5.2	30.0	5.2	30.0	Ohms
3 Inductance per Phase, typ	2.1	11.3	4.2	22.3	mH
4 Rated Current per Phase *	0.96	0.40	0.96	0.40	A
Coil Independent Parameters					
5 Holding Torque, MIN *	106 (15.1)	106 (15.1)	131 (18.5)	131 (18.5)	mNm (oz-in)
6 Detent Torque, Max	29.7 (4.2)				mNm (oz-in)
7 Rotor Inertia	19.5 (0.1066)				gcm² (oz-in²)
8 Step Angle	7.5				Degree
9 Absolute accuracy 2 ph. On, Full step	± 0.5				Degree
10 Steps per Revolution	48.0				
11 Ambient Temp Range (operating)	-20 to +70 (-4 to +158)				°C (°F)
12 Maximum Coil Temperature	130 (266)				°C (°F)
13 Bearing Type	Sintered Bronze Sleeve				
14 Insulation Resistance at 500 VDC	100.0				Mohms
15 Dielectric Withstanding Voltage	650 VRMS for 2 seconds				VAC
16 Weight	116.4 (4.1)				g (oz)
17 Leadwire	AWG #26, UL1430 (105° C, 300 V)				

Note: All motor data values at 20° C unless otherwise specified

* Engergize at rated current, 2-Phase On

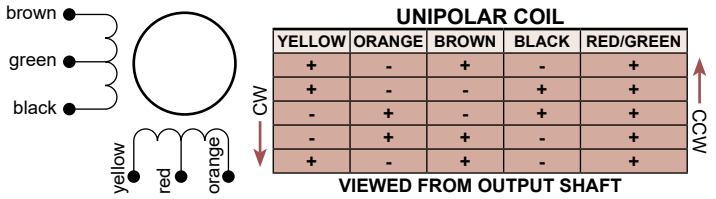

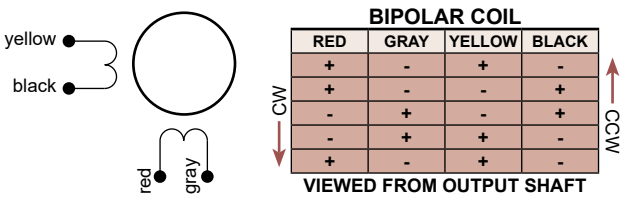

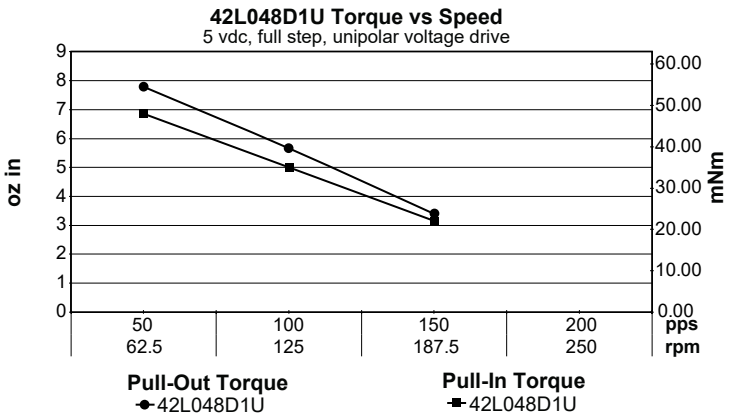

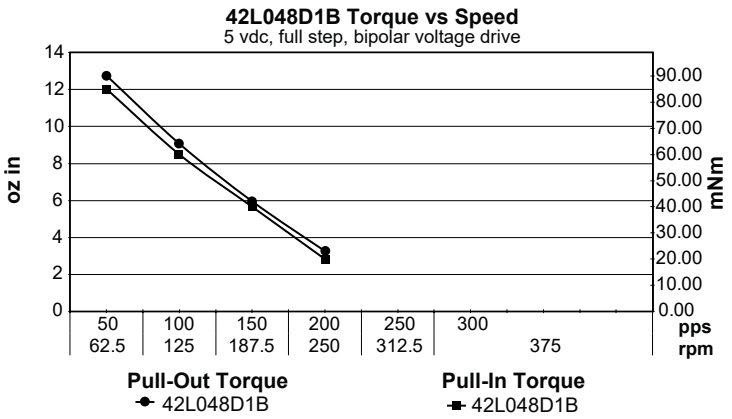

V092020 • © 2020 Portescap. Specifications subject to change without notice.

42M048C

Ø 42 mm • RoHS Compliant • 83.8 mNm

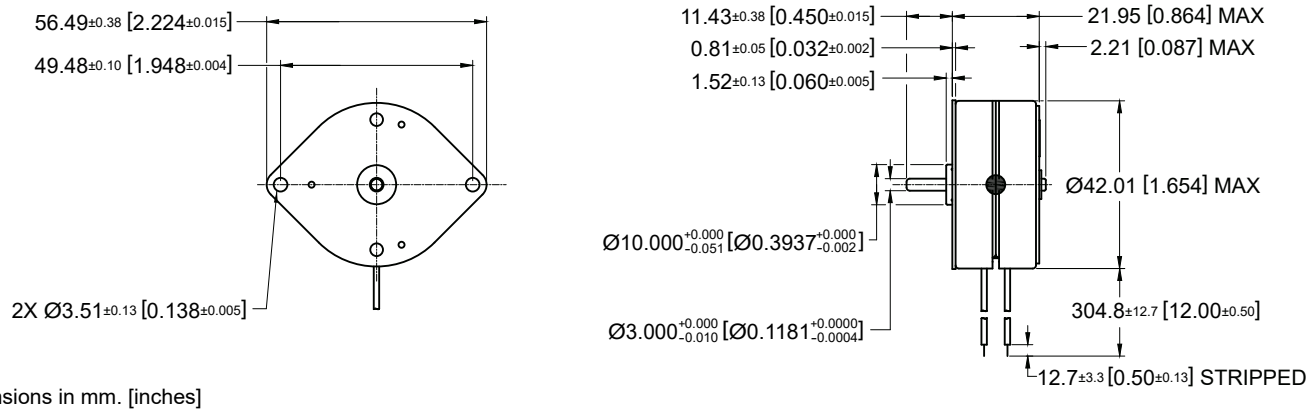

Dimensions in mm. [inches]

Electrical Data	42M048C•• 1U Unipolar	2U Unipolar	1B Bipolar	2B Bipolar	Unit
1 Operating Voltage	5	12	5	12	VDC
2 Resistance per Phase, ± 10%	9.1	52.4	9.1	52.4	Ohms
3 Inductance per Phase, typ	8.1	51.7	16.7	85.7	mH
4 Rated Current per Phase *	0.55	0.23	0.55	0.23	A
Coil Independent Parameters					
5 Holding Torque, MIN *	66.2 (9.4)	66.2 (9.4)	83.8 (11.9)	83.8 (11.9)	mNm (oz-in)
6 Detent Torque, Max	12.7 (1.8)				mNm (oz-in)
7 Rotor Inertia	12.5 (0.068)				gcm² (oz-in²)
8 Step Angle	7.5				Degree
9 Absolute accuracy 2 ph. On, Full step	± 0.5				Degree
10 Steps per Revolution	48.0				
11 Ambient Temp Range (operating)	-20 to +70 (-4 to +158)				°C (°F)
12 Maximum Coil Temperature	130 (266)				°C (°F)
13 Bearing Type	Sintered Bronze Sleeve				
14 Insulation Resistance at 500 VDC	100.0				Mohms
15 Dielectric Withstanding Voltage	650 VRMS for 2 seconds				VAC
16 Weight	145 (5.1)				g (oz)
17 Leadwire	AWG #26, UL1430 (105° C, 300 V)				

Note: All motor data values at 20° C unless otherwise specified
* Engergize at rated current, 2-Phase On

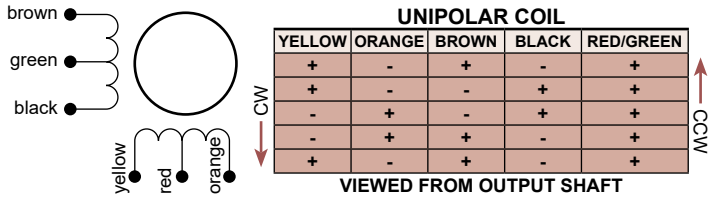

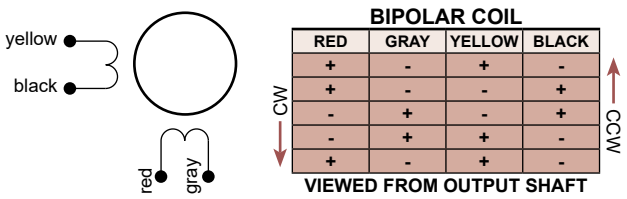

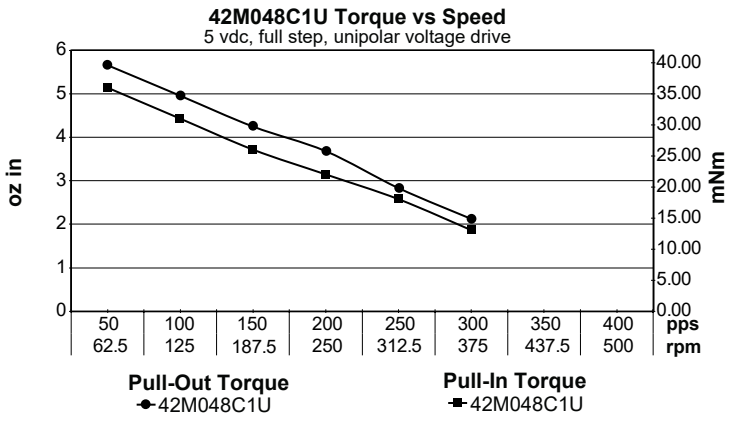

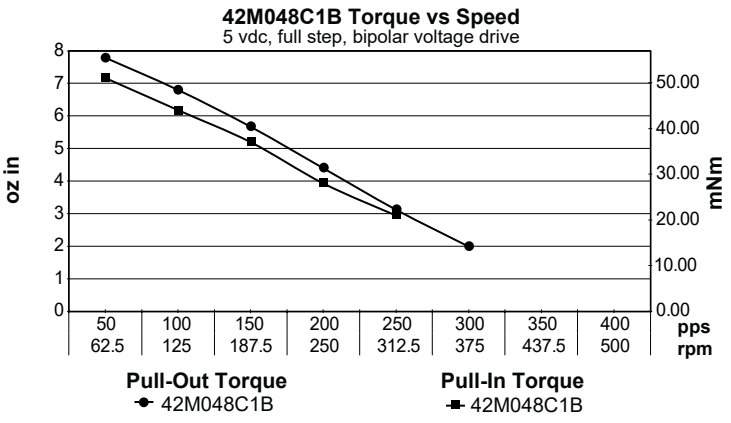

42M048D

Ø 42 mm • RoHS Compliant • 114.4 mNm

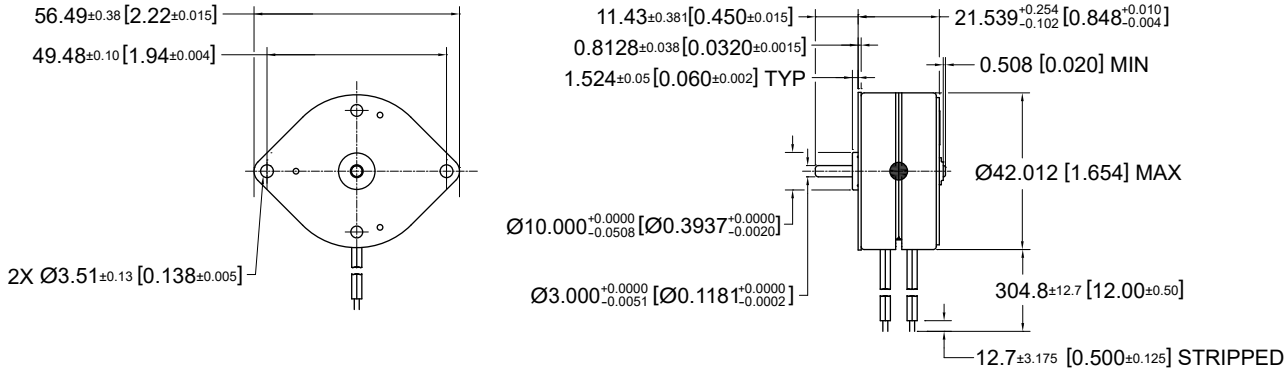

Dimensions in mm. [inches]

Electrical Data	42M048D•• 1U Unipolar	2U Unipolar	1B Bipolar	2B Bipolar	Unit
1 Operating Voltage	5	12	5	12	VDC
2 Resistance per Phase, ± 10%	9.1	52.4	9.1	52.4	Ohms
3 Inductance per Phase, typ	6.5	42.6	14.1	69.3	mH
4 Rated Current per Phase *	0.55	0.23	0.55	0.23	A
Coil Independent Parameters					
5 Holding Torque, MIN *	101.7 (14.4)	101.7 (14.4)	114.4 (16.21)	114.4 (16.21)	mNm (oz-in)
6 Detent Torque, Max	29.66 (4.2)				mNm (oz-in)
7 Rotor Inertia	9.5 (0.05195)				gcm² (oz-in²)
8 Step Angle	7.5				Degree
9 Absolute accuracy 2 ph. On, Full step	± 0.5				Degree
10 Steps per Revolution	48.0				
11 Ambient Temp Range (operating)	-20 to +70 (-4 to +158)				°C (°F)
12 Maximum Coil Temperature	130 (266)				°C (°F)
13 Bearing Type	Sintered Bronze Sleeve				
14 Insulation Resistance at 500 VDC	100.0				Mohms
15 Dielectric Withstanding Voltage	650 VRMS for 2 seconds				VAC
16 Weight	144.58 (5.1)				g (oz)
17 Leadwire	AWG #26, UL1430 (105° C, 300 V)				

Note: All motor data values at 20° C unless otherwise specified

* Engergize at rated current, 2-Phase On

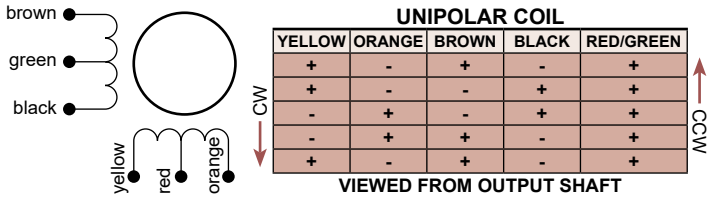

UNIPOLAR COIL

YELLOW	ORANGE	BROWN	BLACK	RED/GREEN
+	-	+	-	+
+	-	-	+	+
-	+	-	+	+
-	+	+	-	+
+	-	+	-	+

CW ↓ ↑ CCW

VIEWED FROM OUTPUT SHAFT

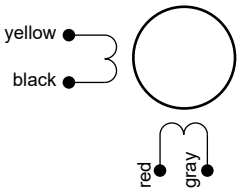

BIPOLAR COIL

RED	GRAY	YELLOW	BLACK
+	-	+	-
+	-	-	+
-	+	-	+
-	+	+	-
+	-	+	-

CW ↓ ↑ CCW

VIEWED FROM OUTPUT SHAFT

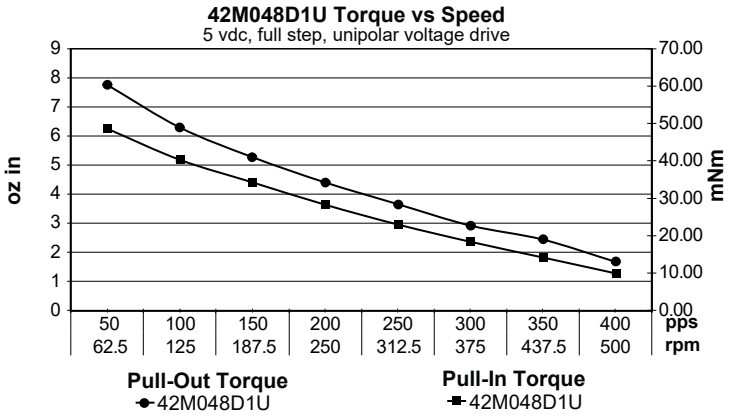

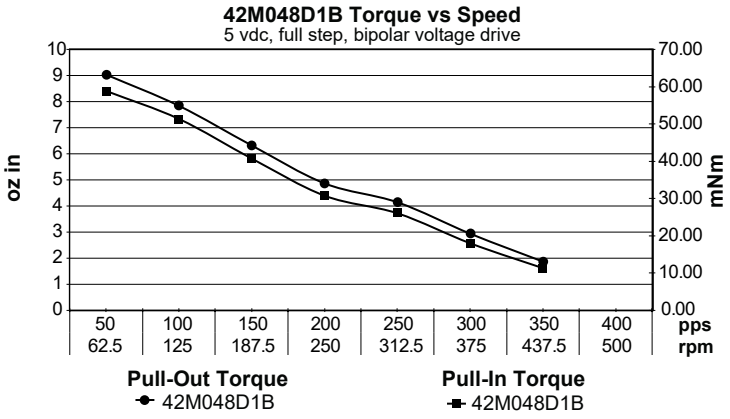

V092020 • © 2020 Portescap. Specifications subject to change without notice.

42M100B

Ø 42 mm • RoHS Compliant • 49.4 mNm

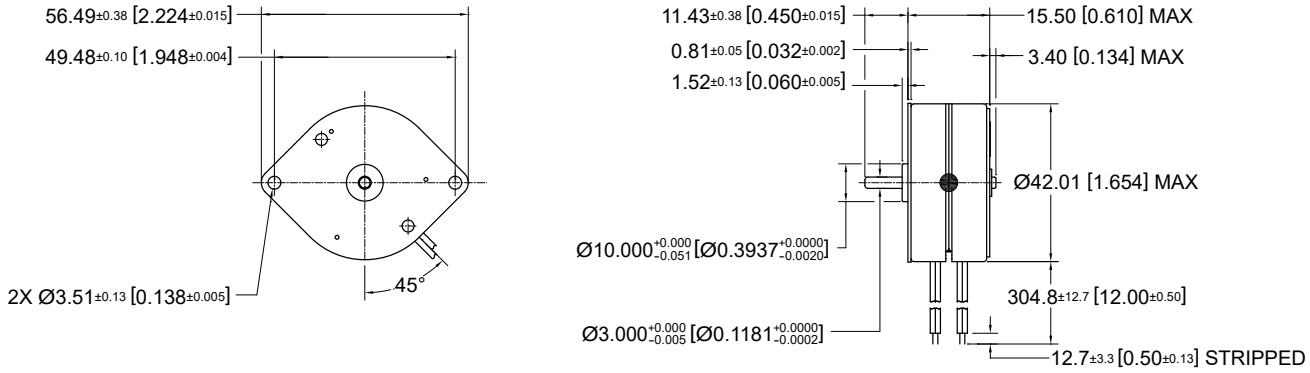

Dimensions in mm. [inches]

Electrical Data	42M100B•• 1U Unipolar	2U Unipolar	1B Bipolar	2B Bipolar	Unit
1 Operating Voltage	5	12	5	12	VDC
2 Resistance per Phase, ± 10%	12.5	75.0	12.5	75.0	Ohms
3 Inductance per Phase, typ	6.6	37.7	11.3	62.1	mH
4 Rated Current per Phase *	0.40	0.16	0.40	0.16	A
Coil Independent Parameters					
5 Holding Torque, MIN *	45.2 (6.4)	45.2 (6.4)	49.4 (7)	49.4 (7)	mNm (oz-in)
6 Detent Torque, Max	5 (0.7)				mNm (oz-in)
7 Rotor Inertia	11.8 (0.065)				gcm² (oz-in²)
8 Step Angle	3.6				Degree
9 Absolute accuracy 2 ph. On, Full step	± 0.5				Degree
10 Steps per Revolution	100.0				
11 Ambient Temp Range (operating)	-20 to +70 (-4 to +158)				°C (°F)
12 Maximum Coil Temperature	130 (266)				°C (°F)
13 Bearing Type	Sintered Bronze Sleeve				
14 Insulation Resistance at 500 VDC	100.0				Mohms
15 Dielectric Withstanding Voltage	650 VRMS for 2 seconds				VAC
16 Weight	87.89 (3.1)				g (oz)
17 Leadwire	AWG #28, UL3265 (125° C, 150 V)				

Note: All motor data values at 20° C unless otherwise specified
* Engergize at rated current, 2-Phase On

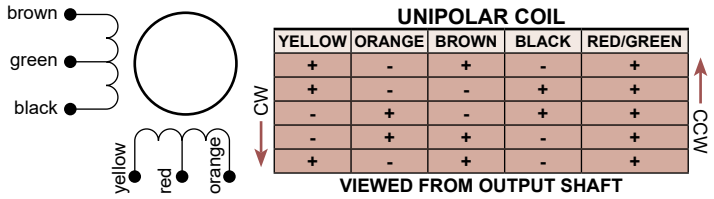

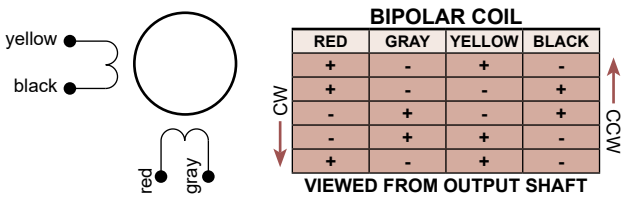

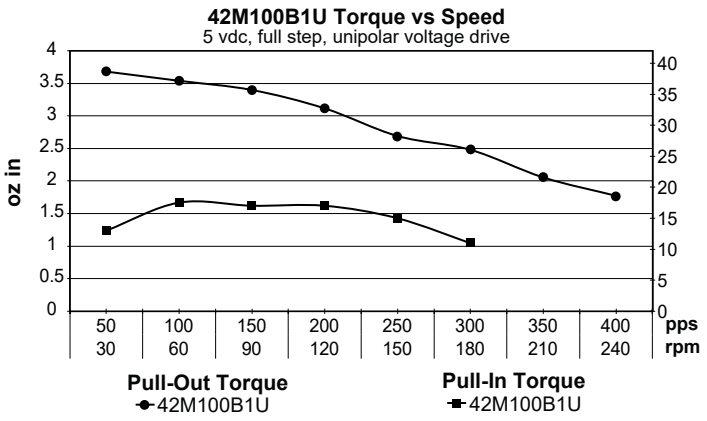

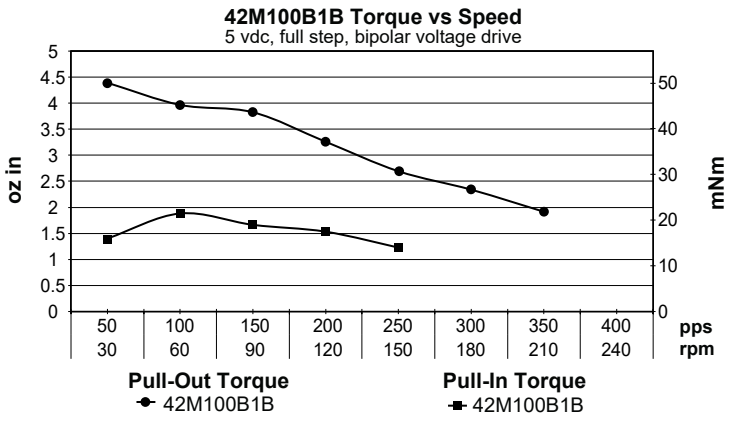

60L024B

Ø 60 mm • RoHS Compliant • 169.5 mNm

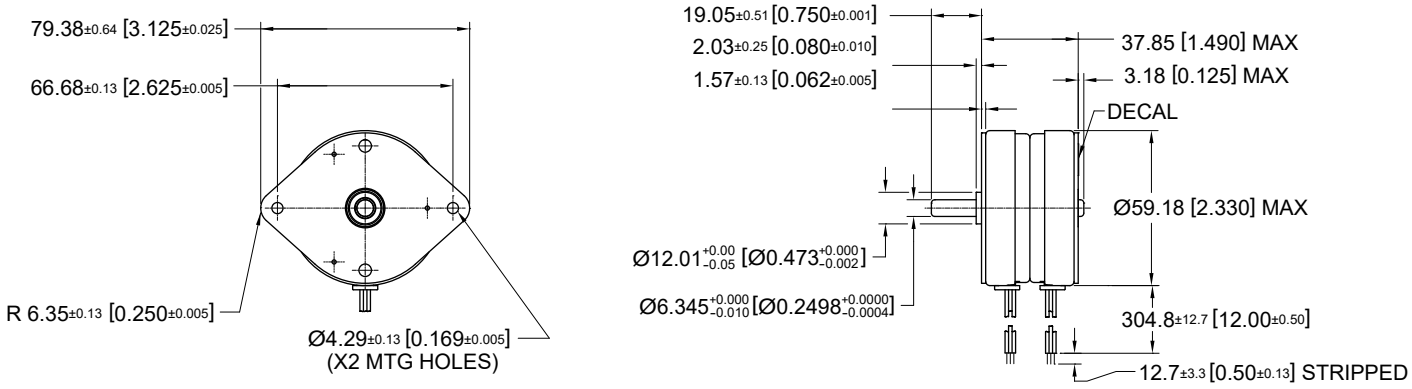

Dimensions in mm. [inches]

Electrical Data	60L024B•• 1U Unipolar	2U Unipolar	1B Bipolar	2B Bipolar	Unit
1 Operating Voltage	5	12	5	12	VDC
2 Resistance per Phase, ± 10%	4.6	26.2	4.6	26.2	Ohms
3 Inductance per Phase, typ	6.0	32.0	11.5	65.0	mH
4 Rated Current per Phase *	1.09	0.46	1.09	0.46	A
Coil Independent Parameters					
5 Holding Torque, MIN *	130.64 (18.5)	130.64 (18.5)	169.48 (24)	169.48 (24)	mNm (oz-in)
6 Detent Torque, Max	28.25 (4)				mNm (oz-in)
7 Rotor Inertia	95 (0.52)				gcm² (oz-in²)
8 Step Angle	15.0				Degree
9 Absolute accuracy 2 ph. On, Full step	± 1				Degree
10 Steps per Revolution	24				
11 Ambient Temp Range (operating)	-20 to +70 (-4 to +158)				°C (°F)
12 Maximum Coil Temperature	130 (266)				°C (°F)
13 Bearing Type	Sintered Bronze Sleeve				
14 Insulation Resistance at 500 VDC	100				Mohms
15 Dielectric Withstanding Voltage	650 VRMS for 2 seconds				VAC
16 Weight	440 (15.5)				g (oz)
17 Leadwire	AWG #24, UL1430 (105° C, 300 V)				

Note: All motor data values at 20° C unless otherwise specified

* Engergize at rated current, 2-Phase On

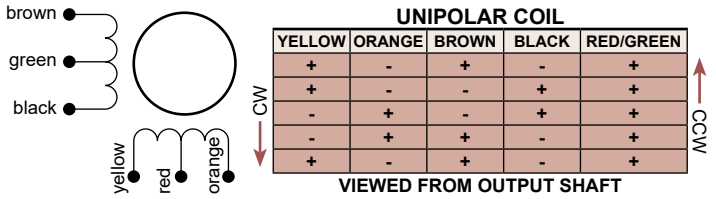

UNIPOLAR COIL

YELLOW	ORANGE	BROWN	BLACK	RED/GREEN
+	-	+	-	+
+	-	-	+	+
-	+	-	+	+
-	+	+	-	+
+	-	+	-	+

CW ↓ ↑ CCW

VIEWED FROM OUTPUT SHAFT

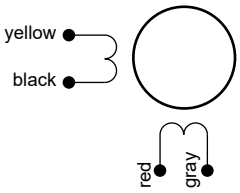

BIPOLAR COIL

RED	GRAY	YELLOW	BLACK
+	-	+	-
+	-	-	+
-	+	-	+
-	+	+	-
+	-	+	-

CW ↓ ↑ CCW

VIEWED FROM OUTPUT SHAFT

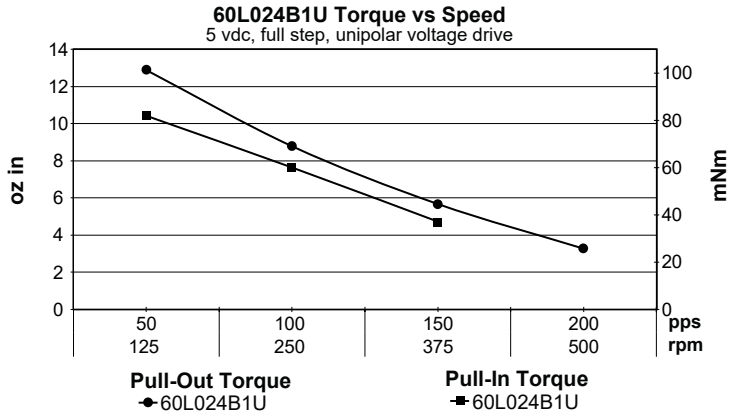

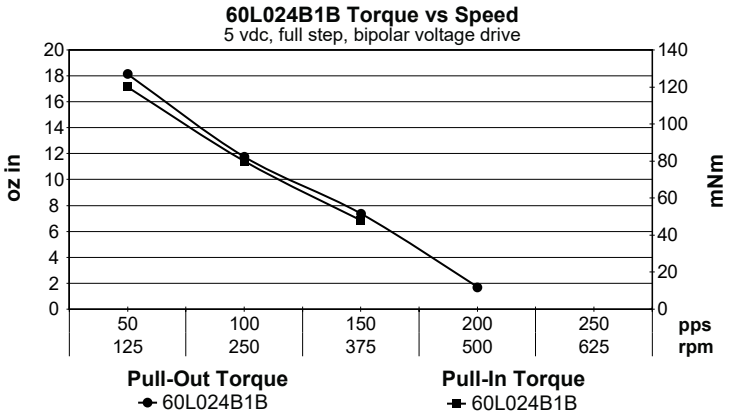

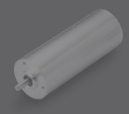
Brushless dc motors

Brush dc motors

Disc magnet motors

Can stack motors

Can stack linear actuators

Gearheads

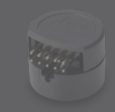
Encoders

Can Stack Linear Actuators

Provide high linear force and accurate positioning in a small package. Our can stack linear actuators combine a 7.5 or 15 degree stepping can stack motor with an integrated lead screw. By eliminating the need for external gears, belts or separate threaded shafts, these compact linear actuators help lower total costs while increasing the performance and reliability of your machine.

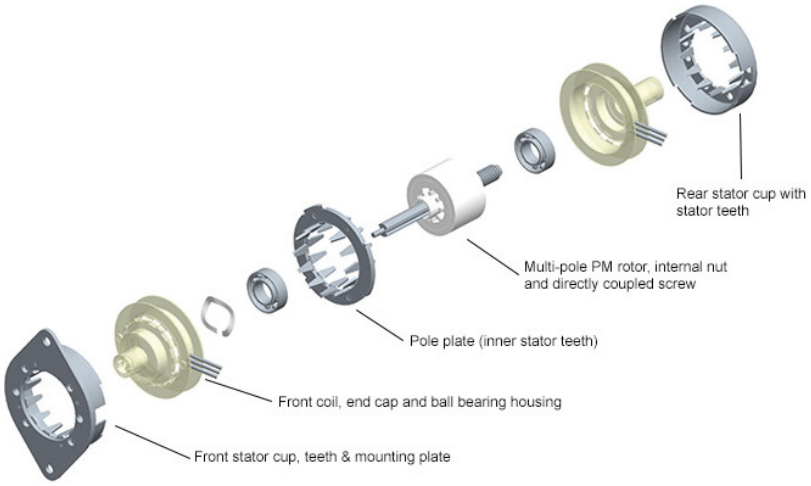

Powerful, Self-Contained Linear Motion

Feature	Details	Application Advantages
Can stack design with built-in lead screw	• No need for separate transmission components • Reversible • Unipolar or bipolar windings	• Compact, cost-effective control of linear positioning and velocity • Simpler, more reliable machine design • High linear power in compact package • Less maintenance
Operation in single step, half step or microstepping modes	• Open-loop, digitally controlled positioning • No need for feedback devices such as encoders	• Reduced machine cost and complexity • Precise resolution to suit almost any application • Quiet operation
Captive and non-captive actuator designs	• Anti-rotation can be part of machine design (non-captive) or integrated with the actuator (captive) • Tip of actuator threaded to accept adapters or direct connection to load	• Ease of assembly, longer stroke lengths • Adaptable to application requirements
Brushless commutation	• No brushes to wear out or replace	• Long life with minimal maintenance • Quiet operation
Ball bearings	• Long bearing life • Dependable performance in wide range of operating conditions	• Reliable, low-maintenance operation for any application

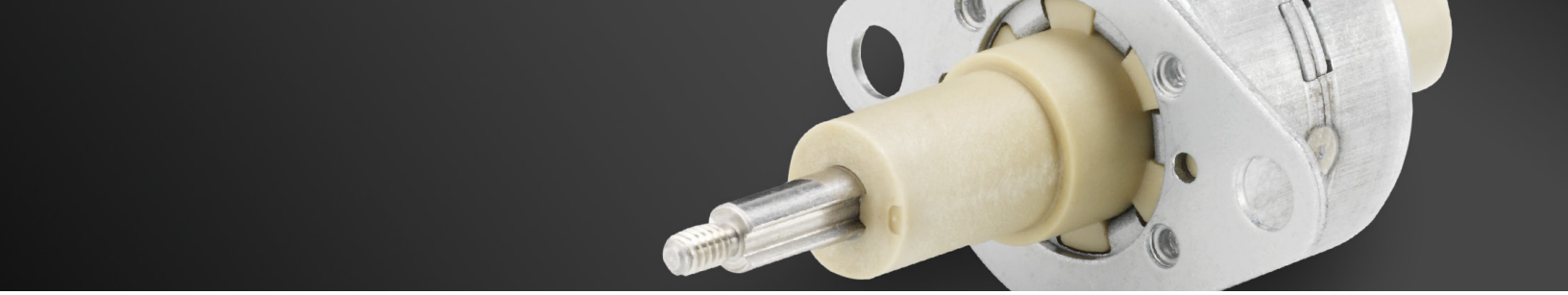

Medical devices & clinical diagnostics
- Infusion systems
- Diagnostic analyzers
- Medical analyzers
- Pipettes
- Sample preparation workstations
- Dosing and dispensing systems

Instrumentation
- Land surveying
- Microscopes

Other
- Stage lighting
- Valve actuation
- Security & access

Meet your Application's Working Point Requirements

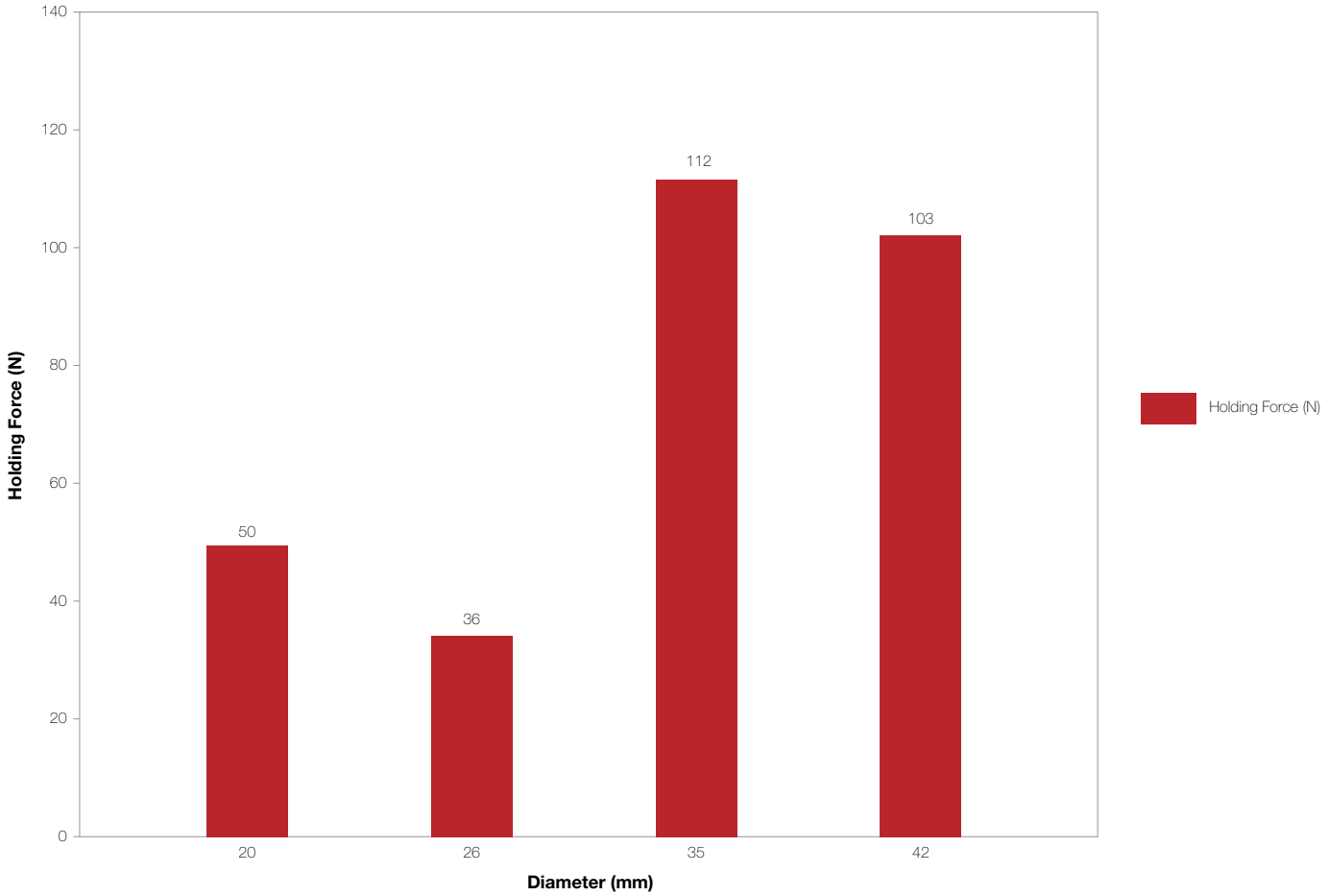

For complete product and application details, visit
portescap.com/linear-actuators

20DAM-K

Ø 20 mm • RoHS Compliant • 30.6 N

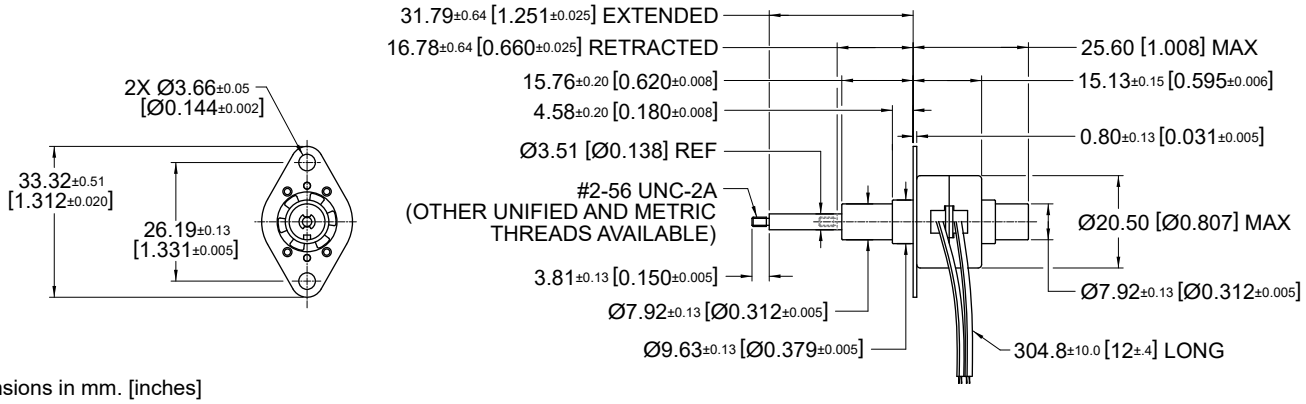

Dimensions in mm. [inches]

Electrical Data		20DAMXX•••-K				Unit
		D1B Bipolar	D2B Bipolar	D1U Unipolar	D2U Unipolar	
1	Operating Voltage #	5	12	5	12	VDC
2	Resistance per Phase, ± 10%	20.0	115.2	20.0	115.2	Ohms
3	Inductance per Phase, typ	7.2	40.8	3.8	20.3	mH
4	Rated Current per Phase, 1 Phase ON	0.35	0.14	0.35	0.14	A
5	Input Power	2.5	2.5	2.5	2.5	W

General Data		XX	Linear travel per step			
6	Min. Holding Force @ rated current	10	@ .001" (0.0254mm)	30.6 (110)	20.9 (75)	N (oz)
		20	@ .002" (0.0508mm)	20.9 (75)	13.9 (50)	N (oz)
		40	@ .004" (0.1016mm)	11.1 (40)	8.3 (30)	N (oz)
7	Min. Holding Force (Unenergized)	10	@ .001" (0.0254mm)	20.9 (75)		N (oz)
		20	@ .002" (0.0508mm)	11.1 (40)		N (oz)
		40	@ .004" (0.1016mm)	2.8 (10)		N (oz)
8	Stroke Length, Typ			15 (0.59)		mm (in)
9	Linear Travel Accuracy			± 1 Step		
10	Steps per Revolution			24		
11	Ambient Temperature Range (operating)			-20 to +70 (-4 to +158)		°C (°F)
12	Maximum Coil Temperature			130 (266)		°C (°F)
13	Bearing Type			Ball Bearing		
14	Insulation Resistance at 500 VDC			20		Mohms
15	Dielectric Withstanding Voltage			650 for 2 seconds		VAC
16	Weight			25 (0.88)		g (oz)
17	Leadwire			AWG #28, UL1429 (80° C, 150 V)		

Notes: 1. All motor data values at 20° C unless otherwise specified – 2. # Voltage in case of voltage driver (indicator R•I)

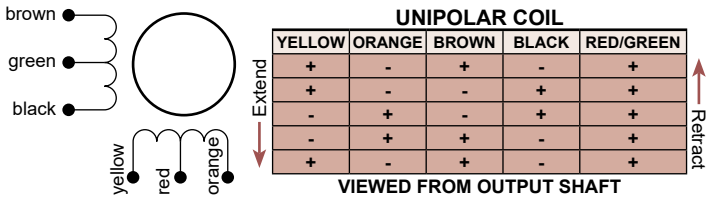

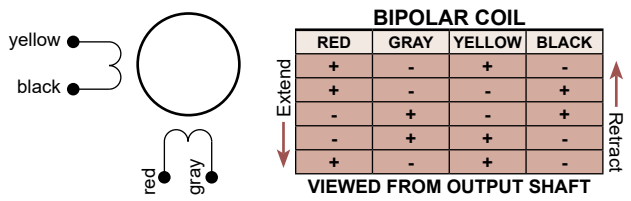

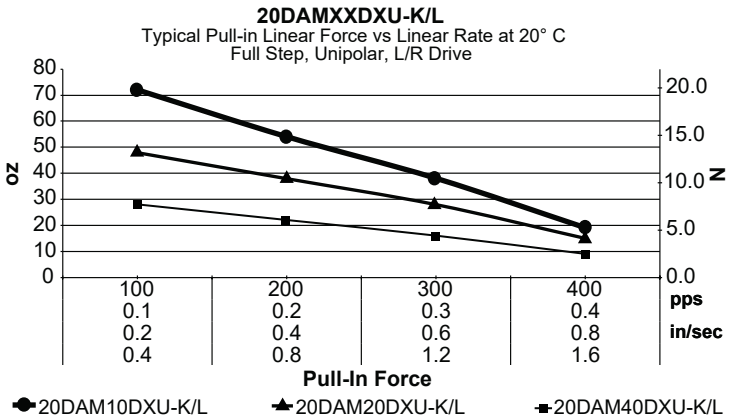

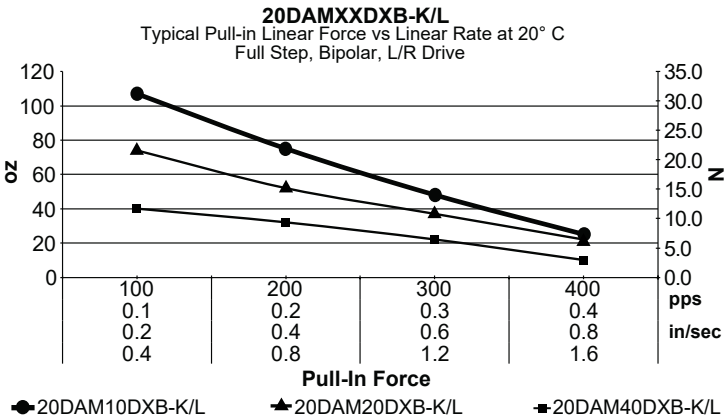

V092020 • © 2020 Portescap. Specifications subject to change without notice.

20DAM-L

Ø 20 mm • RoHS Compliant • 30.6 N

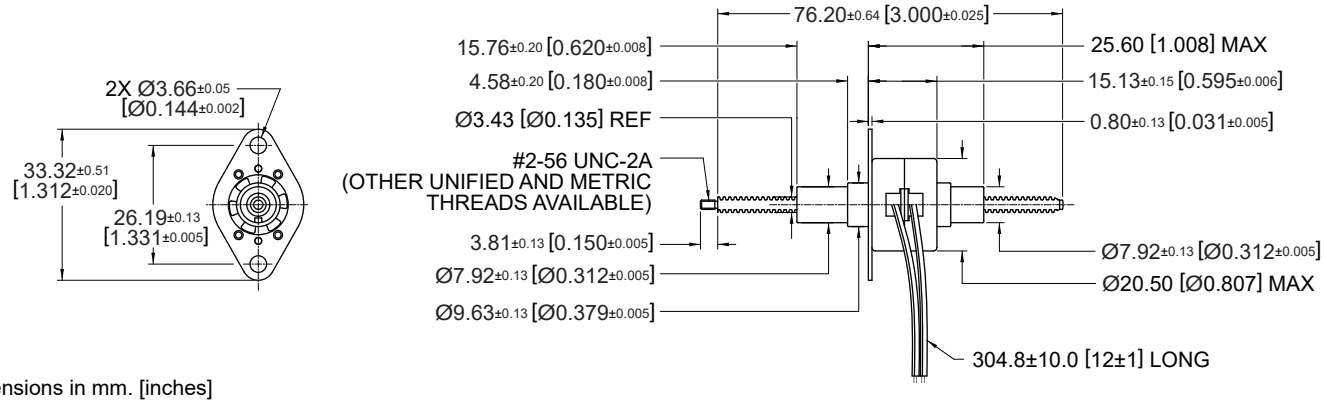

Dimensions in mm. [inches]

Electrical Data		20DAMXX•••-L				Unit
		D1B Bipolar	D2B Bipolar	D1U Unipolar	D2U Unipolar	
1	Operating Voltage #	5	12	5	12	VDC
2	Resistance per Phase, ± 10%	20.0	115.2	20.0	115.2	Ohms
3	Inductance per Phase, typ	7.2	40.8	3.8	20.3	mH
4	Rated Current per Phase, 1 Phase ON	0.35	0.14	0.35	0.14	A
5	Input Power	2.5	2.5	2.5	2.5	W

General Data		XX	Linear travel per step			
6	Min. Holding Force @ rated current	10	@ .001" (0.0254mm)	30.6 (110)	20.9 (75)	N (oz)
		20	@ .002" (0.0508mm)	20.9 (75)	13.9 (50)	N (oz)
		40	@ .004" (0.1016mm)	11.1 (40)	8.3 (30)	N (oz)
7	Min. Holding Force (Unenergized)	10	@ .001" (0.0254mm)	20.9 (75)		N (oz)
		20	@ .002" (0.0508mm)	11.1 (40)		N (oz)
		40	@ .004" (0.1016mm)	2.8 (10)		N (oz)
8	Stroke Length, Typ			50 (1.97)		mm (in)
9	Linear Travel Accuracy			± 1 Step		
10	Steps per Revolution			24		
11	Ambient Temperature Range (operating)			-20 to +70 (-4 to +158)		°C (°F)
12	Maximum Coil Temperature			130 (266)		°C (°F)
13	Bearing Type			Ball Bearing		
14	Insulation Resistance at 500 VDC			20		Mohms
15	Dielectric Withstanding Voltage			650 for 2 seconds		VAC
16	Weight			25 (0.88)		g (oz)
17	Leadwire			AWG #28, UL1429 (80° C, 150 V)		

Notes: 1. All motor data values at 20° C unless otherwise specified – 2. # Voltage in case of voltage driver (indicator R•I)

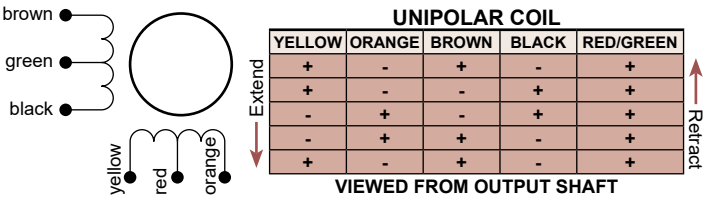

UNIPOLAR COIL

YELLOW	ORANGE	BROWN	BLACK	RED/GREEN	
+	-	+	-	+	Extend
+	-	-	+	+	
-	+	-	+	+	
-	+	+	-	+	
+	-	+	-	+	Retract

VIEWED FROM OUTPUT SHAFT

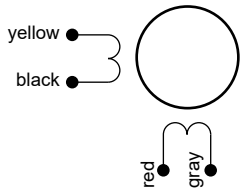

BIPOLAR COIL

RED	GRAY	YELLOW	BLACK	
+	-	+	-	Extend
+	-	-	+	
-	+	-	+	
-	+	+	-	
+	-	+	-	Retract

VIEWED FROM OUTPUT SHAFT

20DAMXXDXU-K/L

Typical Pull-in Linear Force vs Linear Rate at 20° C
Full Step, Unipolar, L/R Drive

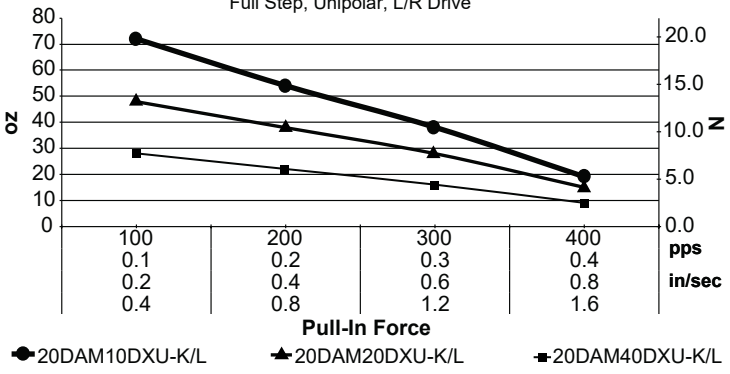

20DAM10DXU-K/L 20DAM20DXU-K/L 20DAM40DXU-K/L

20DAMXXDXB-K/L

Typical Pull-in Linear Force vs Linear Rate at 20° C
Full Step, Bipolar, L/R Drive

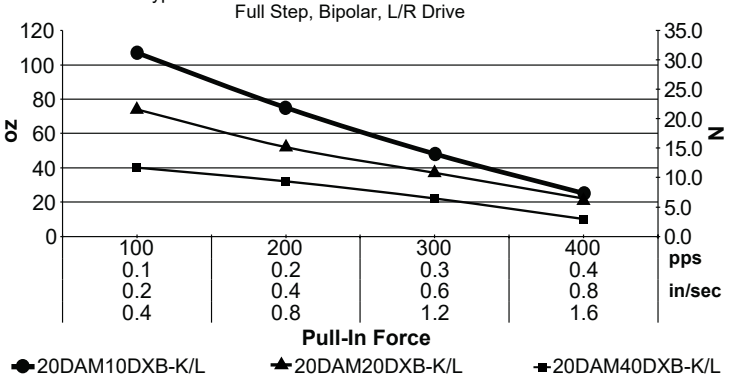

20DAM10DXB-K/L 20DAM20DXB-K/L 20DAM40DXB-K/L

20DBM-K

Ø 20 mm • RoHS Compliant • 50 N

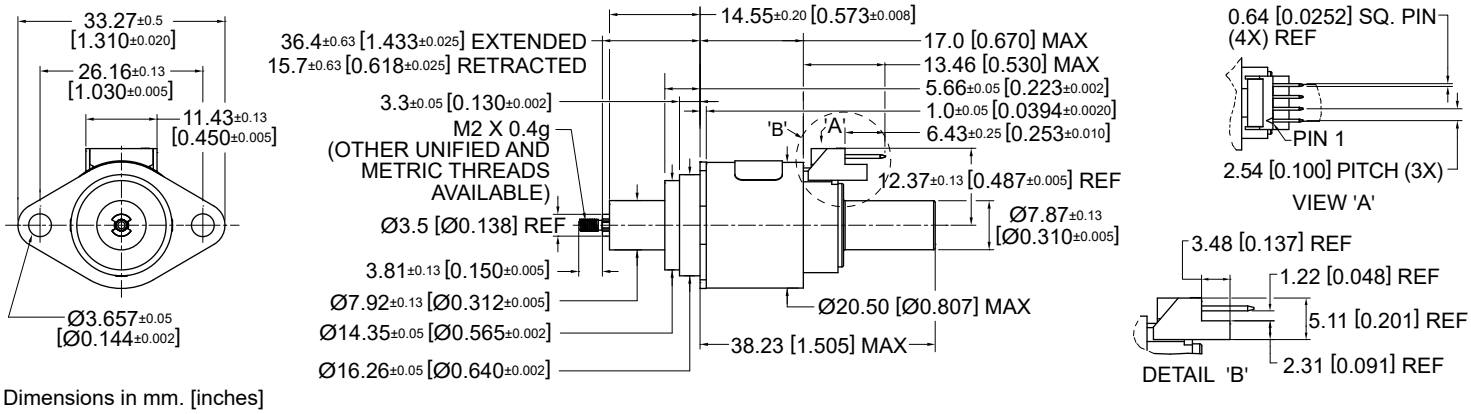

Dimensions in mm. [inches]

Electrical Data		20DBMXX•••-K				Unit
		D2B Bipolar	D1B Bipolar	D3B Bipolar	D4B Bipolar	
1	Operating Voltage #	12	5	2.9	1.4	VDC
2	Resistance per Phase, ± 10%	100.5	17.5	5.7	1.4	Ohms
3	Inductance per Phase, typ	45.0	7.0	2.4	0.6	mH
4	Rated Current per Phase, 1 Phase ON	0.17	0.41	0.71	1.41	A
5	Input Power	2.9	2.9	2.9	2.9	W

General Data		XX	Linear travel per step		
6	Min. Holding Force @ rated current	05	@ .0005" (0.0127mm)	50 (180)	N (oz)
		10	@ .001" (0.0254mm)	35 (126)	N (oz)
		20	@ .002" (0.0508mm)	22 (79)	N (oz)
7	Min. Holding Force (Unenergized)	05	@ .0005" (0.0127mm)	50 (180)	N (oz)
		10	@ .001" (0.0254mm)	13.9 (50)	N (oz)
		20	@ .002" (0.0508mm)	5.5 (20)	N (oz)
8	Stroke Length, Typ			20 (0.79)	mm (in)
9	Linear Travel Accuracy			± 1 Step	
10	Steps per Revolution			48	
11	Ambient Temperature Range (operating)			-20 to +70 (-4 to +158)	°C (°F)
12	Maximum Coil Temperature			130 (266)	°C (°F)
13	Bearing Type			Ball Bearing	
14	Insulation Resistance at 500 VDC			20	Mohms
15	Dielectric Withstanding Voltage			650 for 2 seconds	VAC
16	Weight			35 (1.23)	g (oz)
17	Leadwire				

Notes: 1. All motor data values at 20° C unless otherwise specified – 2. # Voltage in case of voltage driver (indicator R•I)

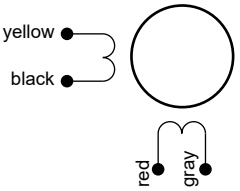

BIPOLAR COIL

RED	GRAY	YELLOW	BLACK
+	-	+	-
+	-	-	+
-	+	-	+
-	+	+	-
+	-	+	-

Extend ↑ / Retract ↓

VIEWED FROM OUTPUT SHAFT

PIN#	COIL	LEADWIRE
1	Front Start	Yellow
2	Front End	Black
3	Rear End	Gray
4	Rear Start	Red

Pull-In Linear Force vs Speed Curves
Microstepping (8/Full Step), PWM, 1x Rated Current (0-Pk)
Curves created with a 5 V motor and 24 V power supply

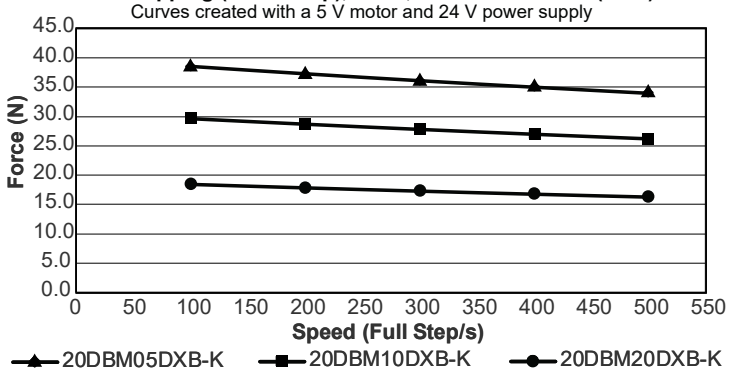

Pull-In Linear Force vs Speed Curves
Microstepping (8/Full Step), PWM, 1.5x Rated Current (0-Pk)
Curves created with a 5 V motor and 24 V power supply

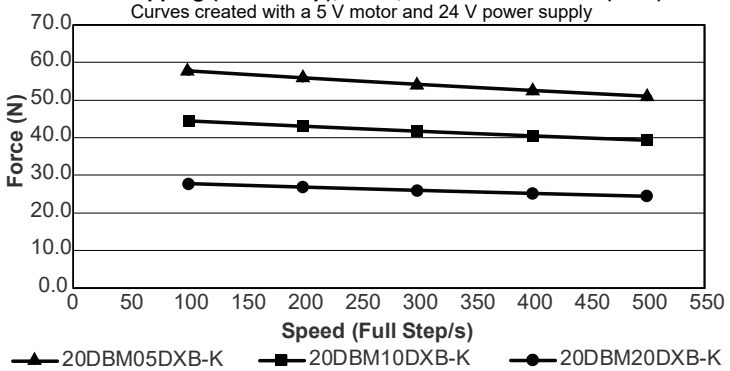

V092020 • © 2020 Portescap. Specifications subject to change without notice.

20DBM-L

Ø 20 mm • RoHS Compliant • 50 N

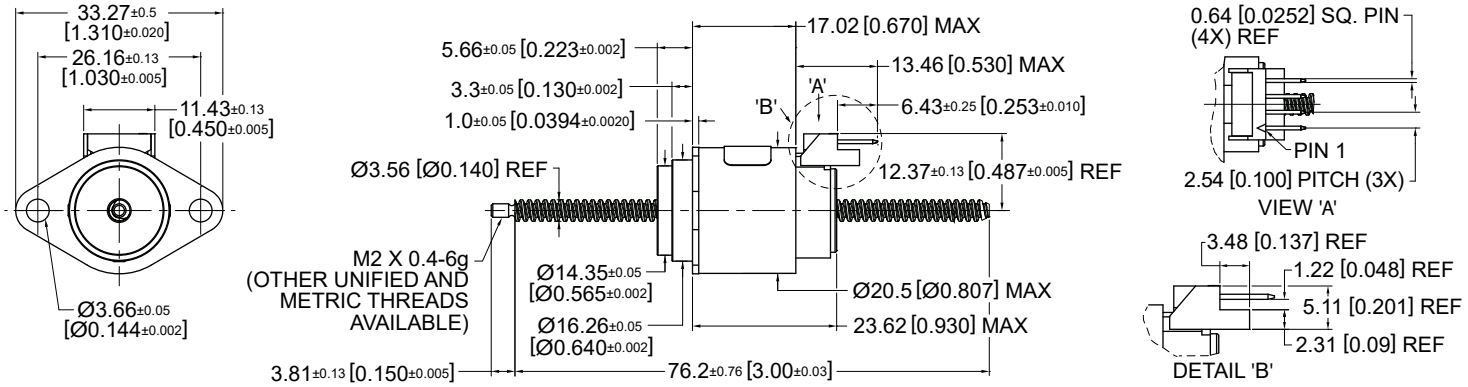

Dimensions in mm. [inches]

Electrical Data		20DBMXX•••-L				Unit
		D2B Bipolar	D1B Bipolar	D3B Bipolar	D4B Bipolar	
1	Operating Voltage #	12	5	2.9	1.4	VDC
2	Resistance per Phase, ± 10%	100.5	17.5	5.7	1.4	Ohms
3	Inductance per Phase, typ	45.0	7.0	2.4	0.6	mH
4	Rated Current per Phase, 1 Phase ON	0.17	0.41	0.71	1.41	A
5	Input Power	2.9	2.9	2.9	2.9	W

General Data		XX	Linear travel per step		
6	Min. Holding Force @ rated current	05	@ .0005" (0.0127mm)	50 (180)	N (oz)
		10	@ .001" (0.0254mm)	35 (126)	N (oz)
		20	@ .002" (0.0508mm)	22 (79)	N (oz)
7	Min. Holding Force (Unenergized)	05	@ .0005" (0.0127mm)	50 (180)	N (oz)
		10	@ .001" (0.0254mm)	13.9 (50)	N (oz)
		20	@ .002" (0.0508mm)	5.5 (20)	N (oz)
8	Stroke Length, Typ			50 (1.97)	mm (in)
9	Linear Travel Accuracy			± 1 Step	
10	Steps per Revolution			48	
11	Ambient Temperature Range (operating)			-20 to +70 (-4 to +158)	°C (°F)
12	Maximum Coil Temperature			130 (266)	°C (°F)
13	Bearing Type			Ball Bearing	
14	Insulation Resistance at 500 VDC			20	Mohms
15	Dielectric Withstanding Voltage			650 for 2 seconds	VAC
16	Weight			35 (1.23)	g (oz)
17	Leadwire				

Notes: 1. All motor data values at 20° C unless otherwise specified – 2. # Voltage in case of voltage driver (indicator R•I)

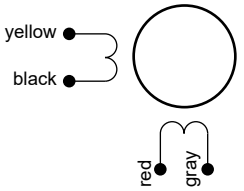

BIPOLAR COIL

RED	GRAY	YELLOW	BLACK
+	-	+	-
+	-	-	+
-	+	-	+
-	+	+	-
+	-	+	-

Extend ↑ / Retract ↓

VIEWED FROM OUTPUT SHAFT

PIN#	COIL	LEADWIRE
1	Front Start	Yellow
2	Front End	Black
3	Rear End	Gray
4	Rear Start	Red

Pull-In Linear Force vs Speed Curves
Microstepping (8/Full Step), PWM, 1x Rated Current (0-Pk)
Curves created with a 5 V motor and 24 V power supply

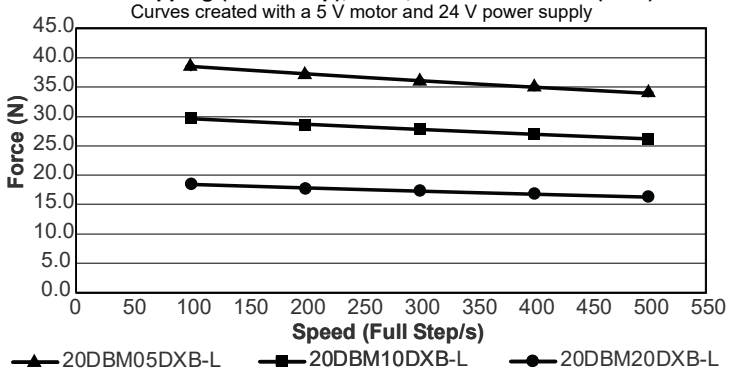

Pull-In Linear Force vs Speed Curves
Microstepping (8/Full Step), PWM, 1.5x Rated Current (0-Pk)
Curves created with a 5 V motor and 24 V power supply

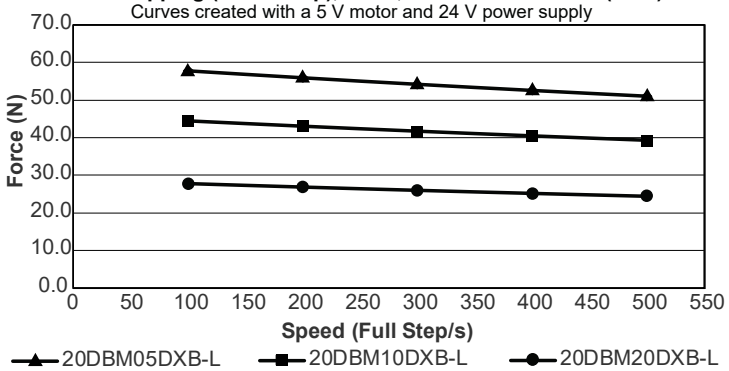

26DAM-K

Ø 26 mm • RoHS Compliant • 33.4 N

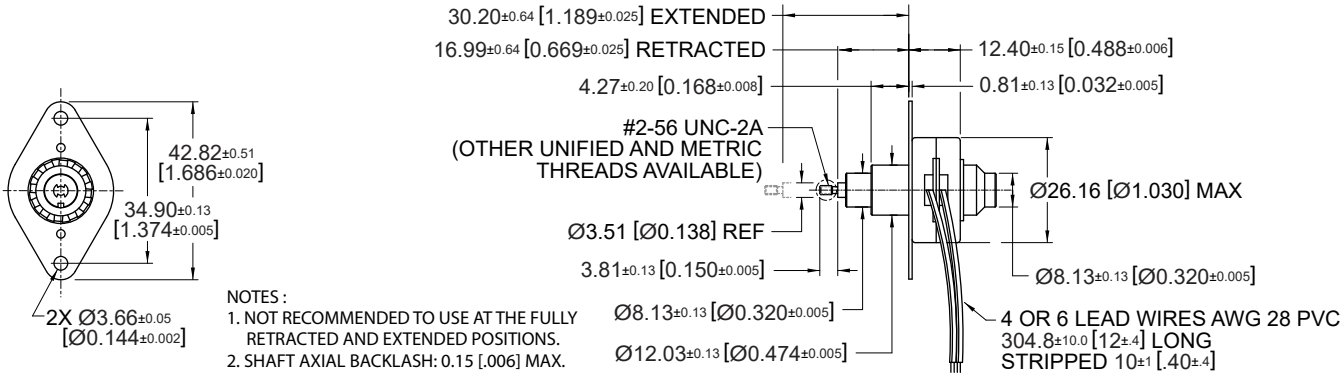

NOTES :
1. NOT RECOMMENDED TO USE AT THE FULLY RETRACTED AND EXTENDED POSITIONS.
2. SHAFT AXIAL BACKLASH: 0.15 [.006] MAX.

Dimensions in mm. [inches]

Electrical Data		26DAMXX•••-K				Unit
		D1B Bipolar	D2B Bipolar	D1U Unipolar	D2U Unipolar	
1	Operating Voltage #	5	12	5	12	VDC
2	Resistance per Phase, ± 10%	14.6	84.0	14.6	84.0	Ohms
3	Inductance per Phase, typ	6.5	33.6	3.8	20.5	mH
4	Rated Current per Phase, 1 Phase ON	0.48	0.20	0.48	0.20	A
5	Input Power	3.4	3.4	3.4	3.4	W

General Data		XX	Linear travel per step			
		10	@ .001" (0.0254mm)	33.4 (120)	20 (72)	N (oz)
6	Min. Holding Force @ rated current	20	@ .002" (0.0508mm)	25 (90)	15.3 (55)	N (oz)
		40	@ .004" (0.1016mm)	14.5 (52)	8.9 (32)	
		10	@ .001" (0.0254mm)	20 (72)		N (oz)
7	Min. Holding Force (Unenergized)	20	@ .002" (0.0508mm)	13.9 (50)		N (oz)
		40	@ .004" (0.1016mm)	5.56 (20)		N (oz)
8	Stroke Length, Typ			13.2 (0.52)		mm (in)
9	Linear Travel Accuracy			± 1 Step		
10	Steps per Revolution			24		
11	Ambient Temperature Range (operating)			-20 to +70 (-4 to +158)		°C (°F)
12	Maximum Coil Temperature			130 (266)		°C (°F)
13	Bearing Type			Ball Bearing		
14	Insulation Resistance at 500 VDC			20		Mohms
15	Dielectric Withstanding Voltage			650 for 2 seconds		VAC
16	Weight			34 (1.2)		g (oz)
17	Leadwire			AWG #28, UL1429 (80° C, 150 V)		

Notes: 1. All motor data values at 20° C unless otherwise specified – 2. # Voltage in case of voltage driver (indicator R•I)

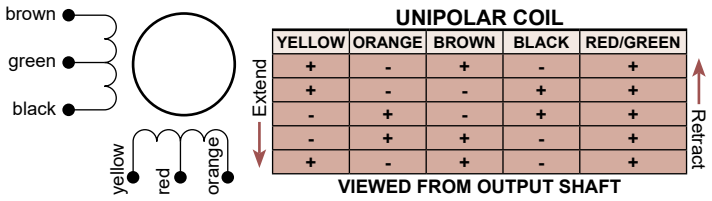

UNIPOLAR COIL

YELLOW	ORANGE	BROWN	BLACK	RED/GREEN	
+	-	+	-	+	Extend
+	-	-	+	+	
-	+	-	+	+	
-	+	+	-	+	
+	-	+	-	+	Retract

VIEWED FROM OUTPUT SHAFT

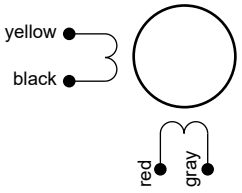

BIPOLAR COIL

RED	GRAY	YELLOW	BLACK	
+	-	+	-	Extend
+	-	-	+	
-	+	-	+	
-	+	+	-	
+	-	+	-	Retract

VIEWED FROM OUTPUT SHAFT

26DAMXXDXU-K/L

Typical Pull-in Linear Force vs Linear Rate at 20° C
Full Step, Unipolar, L/R Drive

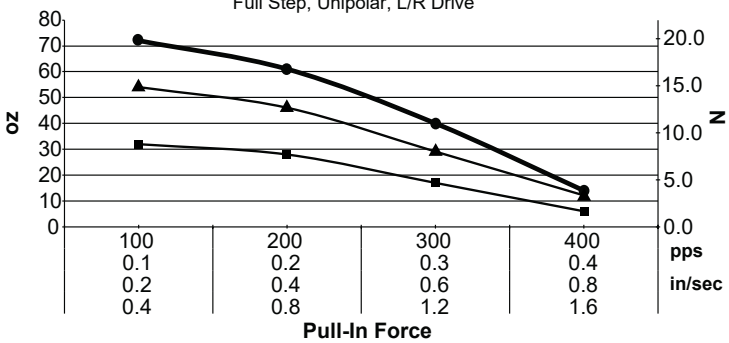

26DAM10DXU-K/L 26DAM20DXU-K/L 26DAM40DXU-K/L

26DAMXXDXB-K/L

Typical Pull-in Linear Force vs Linear Rate at 20° C
Full Step, Bipolar, L/R Drive

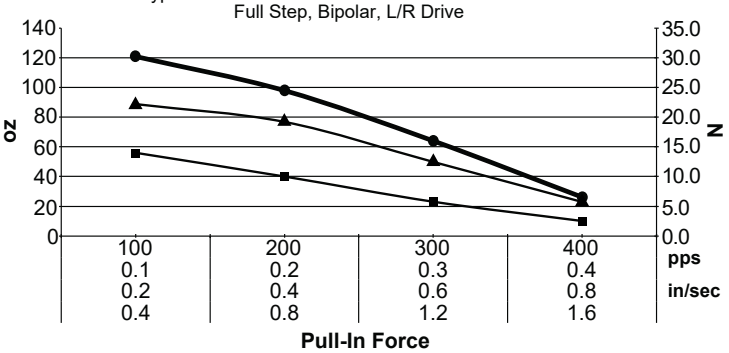

26DAM10DXB-K/L 26DAM20DXB-K/L 26DAM40DXB-K/L

V092020 • © 2020 Portescap. Specifications subject to change without notice.

26DAM-L

Ø 26 mm • RoHS Compliant • 33.4 N

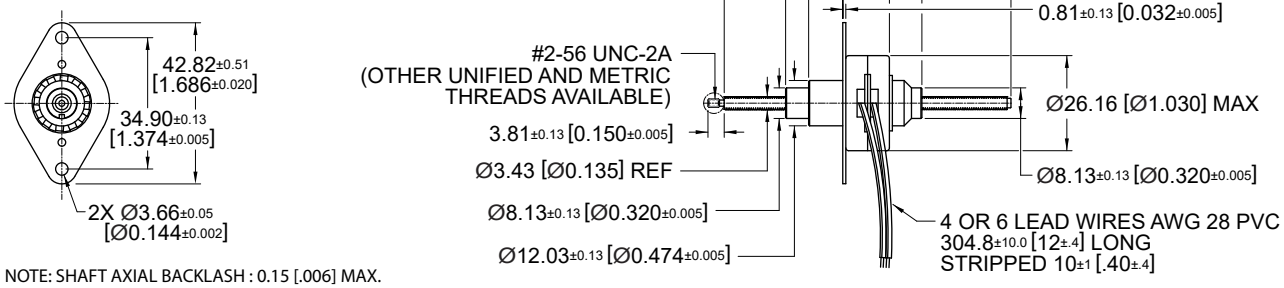

NOTE: SHAFT AXIAL BACKLASH : 0.15 [.006] MAX.

Dimensions in mm. [inches]

Electrical Data		26DAMXX•••-L				Unit
		D1B Bipolar	D2B Bipolar	D1U Unipolar	D2U Unipolar	
1	Operating Voltage #	5	12	5	12	VDC
2	Resistance per Phase, ± 10%	14.6	84.0	14.6	84.0	Ohms
3	Inductance per Phase, typ	6.5	33.6	3.8	20.5	mH
4	Rated Current per Phase, 1 Phase ON	0.48	0.20	0.48	0.20	A
5	Input Power	3.4	3.4	3.4	3.4	W

General Data		XX	Linear travel per step			
		10	@ .001" (0.0254mm)	33.4 (120)	20 (72)	N (oz)
6	Min. Holding Force @ rated current	20	@ .002" (0.0508mm)	25 (90)	15.3 (55)	N (oz)
		40	@ .004" (0.1016mm)	14.5 (52)	8.9 (32)	
		10	@ .001" (0.0254mm)	20 (72)		N (oz)
7	Min. Holding Force (Unenergized)	20	@ .002" (0.0508mm)	13.9 (50)		N (oz)
		40	@ .004" (0.1016mm)	5.56 (20)		N (oz)
8	Stroke Length, Typ			48 (1.89)		mm (in)
9	Linear Travel Accuracy			± 1 Step		
10	Steps per Revolution			24		
11	Ambient Temperature Range (operating)			-20 to +70 (-4 to +158)		°C (°F)
12	Maximum Coil Temperature			130 (266)		°C (°F)
13	Bearing Type			Ball Bearing		
14	Insulation Resistance at 500 VDC			20		Mohms
15	Dielectric Withstanding Voltage			650 for 2 seconds		VAC
16	Weight			34 (1.2)		g (oz)
17	Leadwire			AWG #28, UL1429 (80° C, 150 V)		

Notes: 1. All motor data values at 20° C unless otherwise specified – 2. # Voltage in case of voltage driver (indicator R•I)

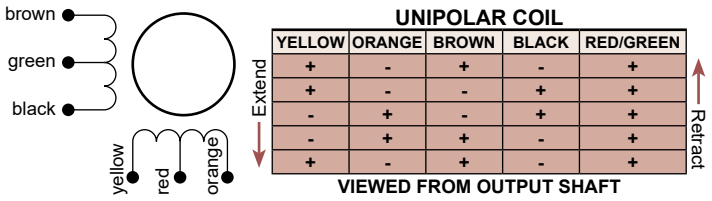

UNIPOLAR COIL

YELLOW	ORANGE	BROWN	BLACK	RED/GREEN	
+	-	+	-	+	Extend
+	-	-	+	+	
-	+	-	+	+	
-	+	+	-	+	
+	-	+	-	+	Retract

VIEWED FROM OUTPUT SHAFT

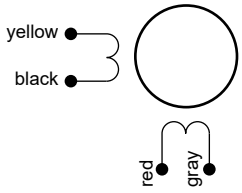

BIPOLAR COIL

RED	GRAY	YELLOW	BLACK	
+	-	+	-	Extend
+	-	-	+	
-	+	-	+	
-	+	+	-	
+	-	+	-	Retract

VIEWED FROM OUTPUT SHAFT

26DAMXXDXU-K/L

Typical Pull-in Linear Force vs Linear Rate at 20° C
Full Step, Unipolar, L/R Drive

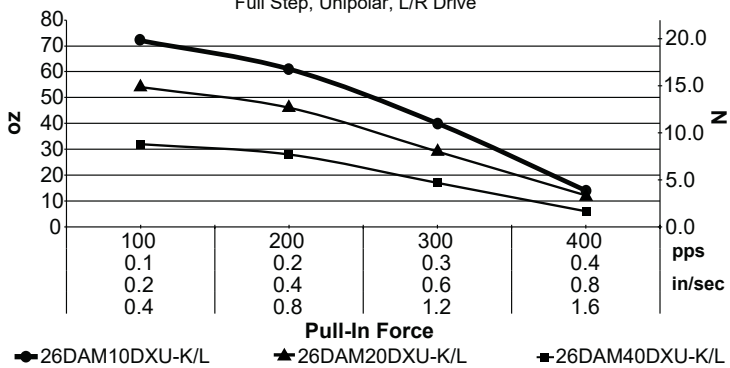

26DAMXXDXB-K/L

Typical Pull-in Linear Force vs Linear Rate at 20° C
Full Step, Bipolar, L/R Drive

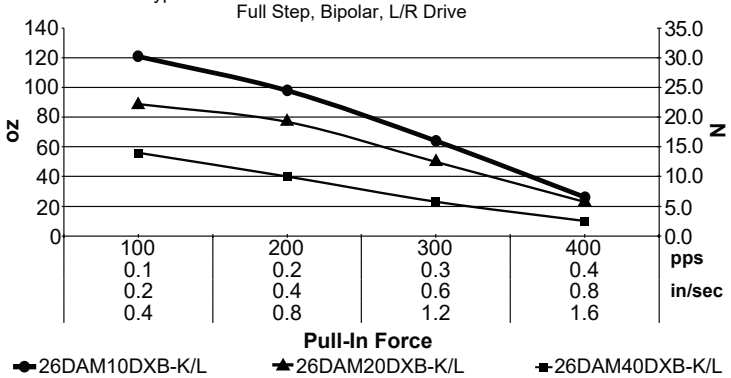

26DBM-K

Ø 26 mm • RoHS Compliant • 35.6 N

NOTES :
1. NOT RECOMMENDED TO USE AT THE FULLY RETRACTED AND EXTENDED POSITIONS.
2. SHAFT AXIAL BACKLASH: 0.15 [.006] MAX.

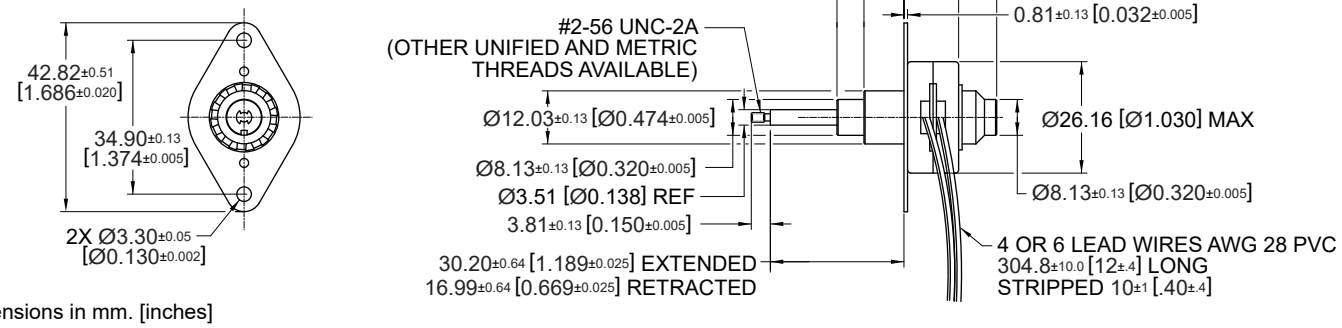

Dimensions in mm. [inches]

Electrical Data	26DBMXX•••-K D1B Bipolar	D2B Bipolar	D1U Unipolar	D2U Unipolar	Unit
1 Operating Voltage #	5	12	5	12	VDC
2 Resistance per Phase, ± 10%	14.6	84.0	14.6	84.0	Ohms
3 Inductance per Phase, typ	8.4	43.3	5.0	26.5	mH
4 Rated Current per Phase, 1 Phase ON	0.48	0.20	0.48	0.20	A
5 Input Power	3.4	3.4	3.4	3.4	W

General Data	XX	Linear travel per step			
6 Min. Holding Force @ rated current	5	@ .001" (0.0254mm)	35.6 (128)	34.2 (123)	N (oz)
	10	@ .002" (0.0508mm)	28.9 (104)	28.1 (101)	N (oz)
	20	@ .004" (0.1016mm)	19.2 (69)	17.8 (64)	
7 Min. Holding Force (Unenergized)	5	@ .001" (0.0254mm)	34.2 (123)		N (oz)
	10	@ .002" (0.0508mm)	13.9 (50)		N (oz)
	20	@ .004" (0.1016mm)	5.5 (20)		N (oz)
8 Stroke Length, Typ			13.2 (0.52)		mm (in)
9 Linear Travel Accuracy			± 1 Step		
10 Steps per Revolution			48		
11 Ambient Temperature Range (operating)			-20 to +70 (-4 to +158)		°C (°F)
12 Maximum Coil Temperature			130 (266)		°C (°F)
13 Bearing Type			Ball Bearing		
14 Insulation Resistance at 500 VDC			20		Mohms
15 Dielectric Withstanding Voltage			650 for 2 seconds		VAC
16 Weight			34 (1.2)		g (oz)
17 Leadwire			AWG #28, UL1429 (80° C, 150 V)		

Notes: 1. All motor data values at 20° C unless otherwise specified – 2. # Voltage in case of voltage driver (indicator R•I)

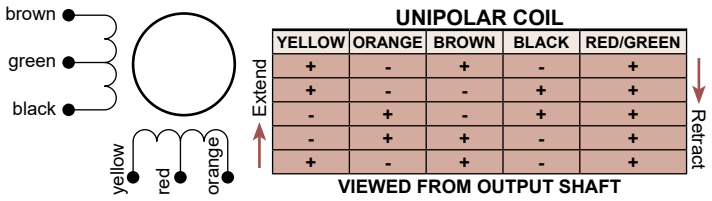

UNIPOLAR COIL

YELLOW	ORANGE	BROWN	BLACK	RED/GREEN	
+	-	+	-	+	Extend
+	-	-	+	+	
-	+	-	+	+	
-	+	+	-	+	
+	-	+	-	+	Retract

VIEWED FROM OUTPUT SHAFT

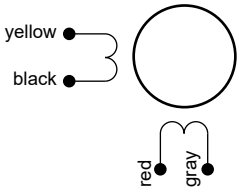

BIPOLAR COIL

RED	GRAY	YELLOW	BLACK	
+	-	+	-	Extend
+	-	-	+	
-	+	-	+	
-	+	+	-	
+	-	+	-	Retract

VIEWED FROM OUTPUT SHAFT

26DBMXXDXB-K/L
Typical Pull-in Linear Force vs Linear Rate at 20° C
Full Step, Bipolar, L/R Drive

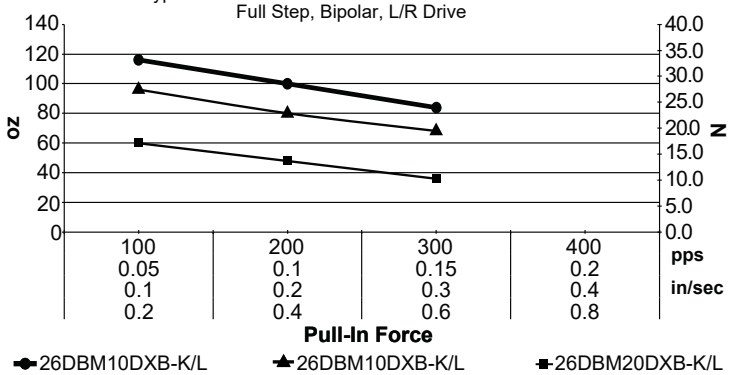

26DBMXXDXB-K/L
Typical Pull-in Linear Force vs Linear Rate at 20° C
Full Step, Bipolar, L/R Drive

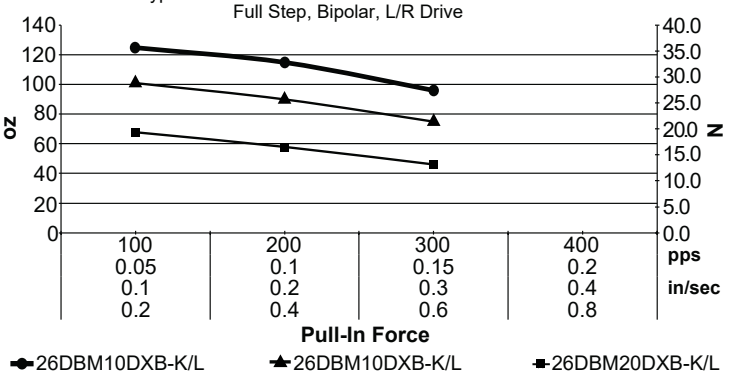

V092020 • © 2020 Portescap. Specifications subject to change without notice.

26DBM-L

Ø 26 mm • RoHS Compliant • 35.6 N

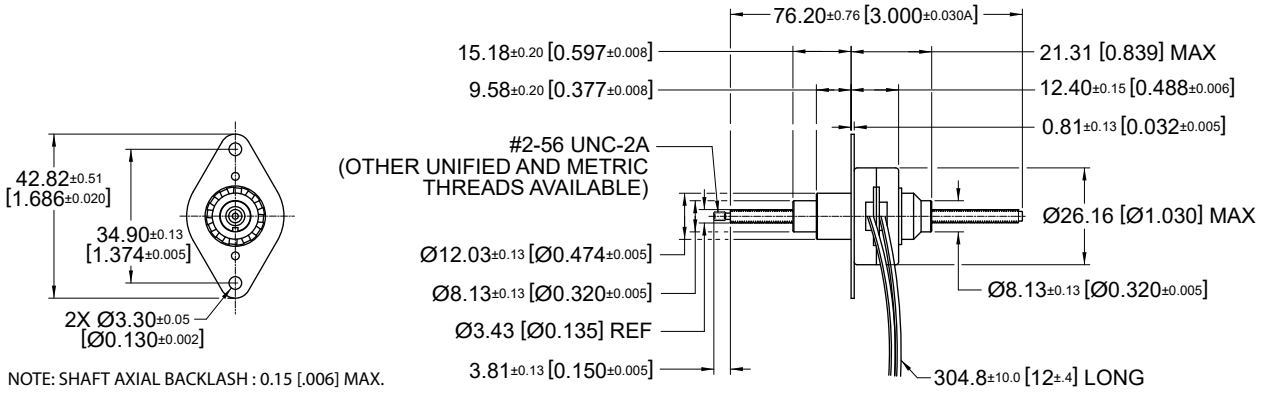

NOTE: SHAFT AXIAL BACKLASH : 0.15 [.006] MAX.

Dimensions in mm. [inches]

Electrical Data		26DBMXX•••-L				Unit
		D1B Bipolar	D2B Bipolar	D1U Unipolar	D2U Unipolar	
1	Operating Voltage #	5	12	5	12	VDC
2	Resistance per Phase, ± 10%	14.6	84.0	14.6	84.0	Ohms
3	Inductance per Phase, typ	8.4	43.3	5.0	26.5	mH
4	Rated Current per Phase, 1 Phase ON	0.48	0.20	0.48	0.20	A
5	Input Power	3.4	3.4	3.4	3.4	W

General Data		XX	Linear travel per step			
6	Min. Holding Force @ rated current	5	@ .001" (0.0254mm)	35.6 (128)	34.2 (123)	N (oz)
		10	@ .002" (0.0508mm)	28.9 (104)	28.1 (101)	N (oz)
		20	@ .004" (0.1016mm)	19.2 (69)	17.8 (64)	
7	Min. Holding Force (Unenergized)	5	@ .001" (0.0254mm)	34.2 (123)		N (oz)
		10	@ .002" (0.0508mm)	13.9 (50)		N (oz)
		20	@ .004" (0.1016mm)	5.5 (20)		N (oz)
8	Stroke Length, Typ			48 (1.89)		mm (in)
9	Linear Travel Accuracy			± 1 Step		
10	Steps per Revolution			48		
11	Ambient Temperature Range (operating)			-20 to +70 (-4 to +158)		°C (°F)
12	Maximum Coil Temperature			130 (266)		°C (°F)
13	Bearing Type			Ball Bearing		
14	Insulation Resistance at 500 VDC			20		Mohms
15	Dielectric Withstanding Voltage			650 for 2 seconds		VAC
16	Weight			34 (1.2)		g (oz)
17	Leadwire			AWG #28, UL1429 (80° C, 150 V)		

Notes: 1. All motor data values at 20° C unless otherwise specified – 2. # Voltage in case of voltage driver (indicator R•I)

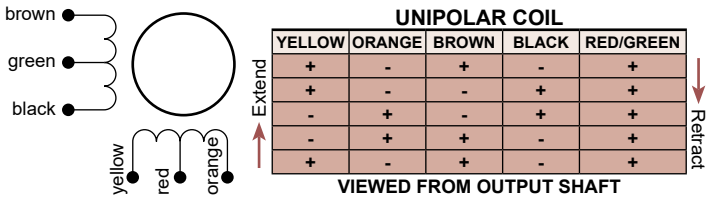

UNIPOLAR COIL

YELLOW	ORANGE	BROWN	BLACK	RED/GREEN	
+	-	+	-	+	Extend
+	-	-	+	+	
-	+	-	+	+	
-	+	+	-	+	
+	-	+	-	+	Retract

VIEWED FROM OUTPUT SHAFT

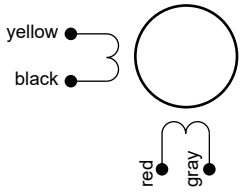

BIPOLAR COIL

RED	GRAY	YELLOW	BLACK	
+	-	+	-	Extend
+	-	-	+	
-	+	-	+	
-	+	+	-	
+	-	+	-	Retract

VIEWED FROM OUTPUT SHAFT

26DBMXXDXB-K/L
Typical Pull-in Linear Force vs Linear Rate at 20° C
Full Step, Bipolar, L/R Drive

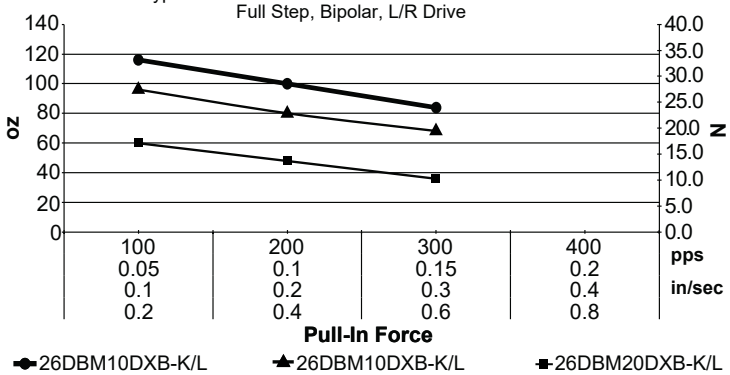

26DBMXXDXB-K/L
Typical Pull-in Linear Force vs Linear Rate at 20° C
Full Step, Bipolar, L/R Drive

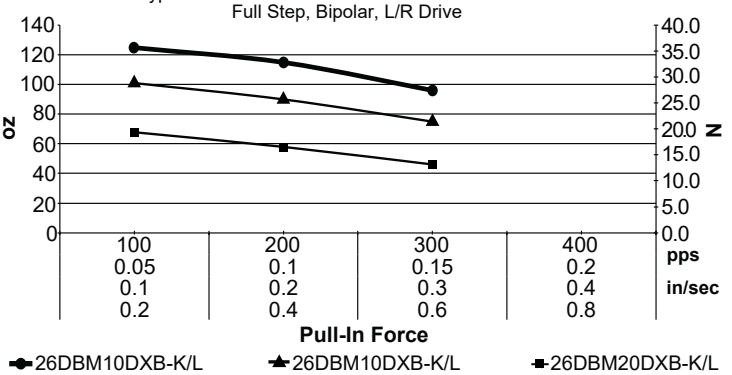

35DBM-K

Ø 35 mm • RoHS Compliant • 112 N

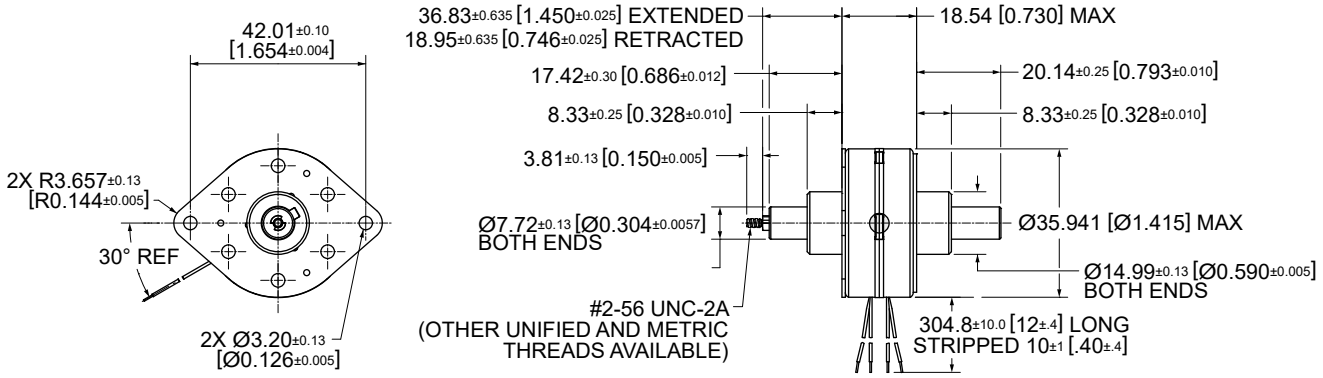

Dimensions in mm. [inches]

Electrical Data		35DBMXX•••-K D1B Bipolar	D2B Bipolar	D3B Bipolar	Unit
1	Operating Voltage #	5	12	2.5	VDC
2	Resistance per Phase, ± 10%	10.0	58.0	2.5	Ohms
3	Inductance per Phase, typ	9.5	51.4	2.4	mH
4	Rated Current per Phase, 1 Phase ON	0.71	0.29	1.41	A
5	Input Power	5.0	5.0	5.0	W

General Data		XX	Linear travel per step		
6	Min. Holding Force @ rated current	10	@ .001" (0.0254mm)	112 (403)	N (oz)
		20	@ .002" (0.0508mm)	70 (252)	N (oz)
7	Min. Holding Force (Unenergized)	10	@ .001" (0.0254mm)	40 (144)	N (oz)
		20	@ .002" (0.0508mm)	10 (36)	N (oz)
8	Stroke Length, Typ			17 (0.67)	mm (in)
9	Linear Travel Accuracy			± 1 Step	
10	Steps per Revolution			48	
11	Ambient Temperature Range (operating)			-20 to +70 (-4 to +158)	°C (°F)
12	Maximum Coil Temperature			130 (266)	°C (°F)
13	Bearing Type			Ball Bearing	
14	Insulation Resistance at 500 VDC			20	Mohms
15	Dielectric Withstanding Voltage			650 for 2 seconds	VAC
16	Weight			85 (3)	g (oz)
17	Leadwire			AWG 26, UL 1429	

Notes: 1. All motor data values at 20° C unless otherwise specified – 2. # Voltage in case of voltage driver (indicator R•I)

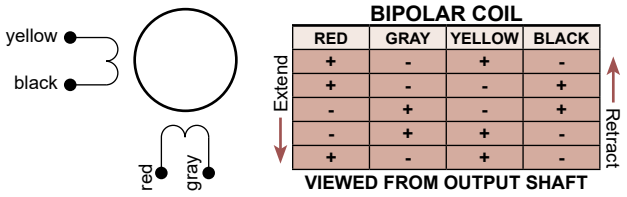

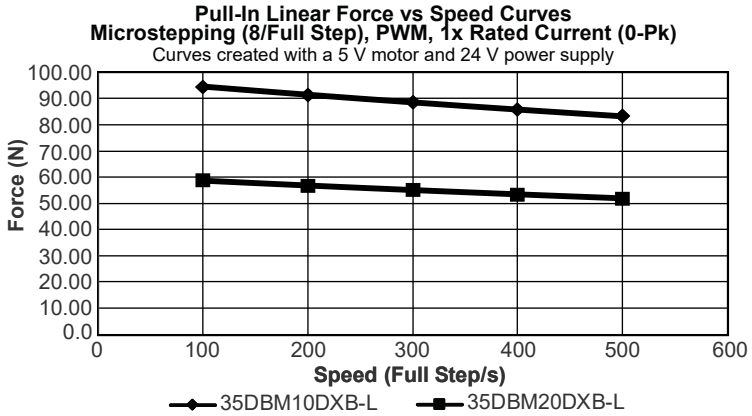

V092020 • © 2020 Portescap. Specifications subject to change without notice.

35DBM-L

Ø 35 mm • RoHS Compliant • 112 N

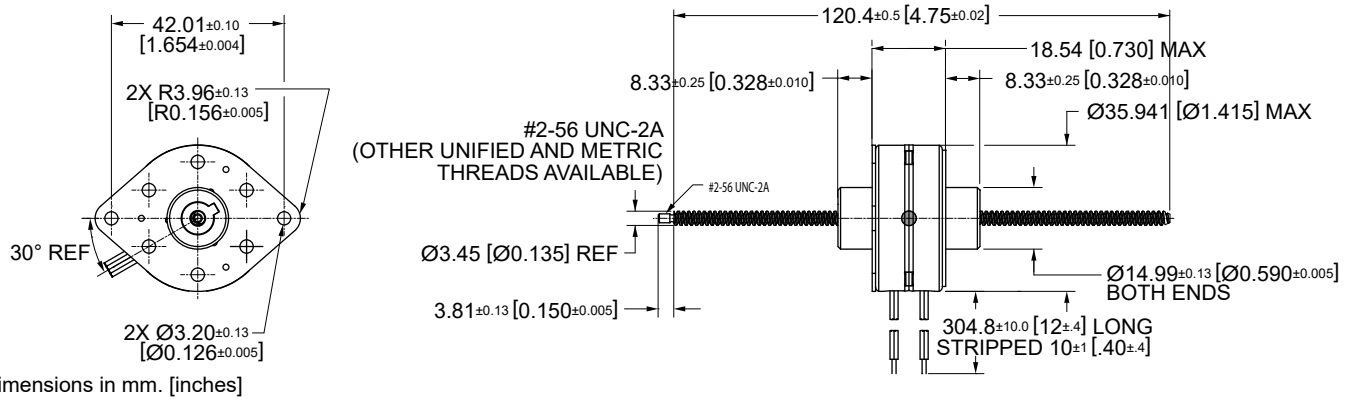

Dimensions in mm. [inches]

Electrical Data		35DBMXX•••-L D1B Bipolar	D2B Bipolar	D3B Bipolar	Unit
1	Operating Voltage #	5	12	2.5	VDC
2	Resistance per Phase, ± 10%	10.0	58.0	2.5	Ohms
3	Inductance per Phase, typ	9.5	51.4	2.4	mH
4	Rated Current per Phase, 1 Phase ON	0.71	0.29	1.41	A
5	Input Power	5.0	5.0	5.0	W

General Data		XX	Linear travel per step		
6	Min. Holding Force @ rated current	10	@ .001" (0.0254mm)	112 (403)	N (oz)
		20	@ .002" (0.0508mm)	70 (252)	N (oz)
7	Min. Holding Force (Unenergized)	10	@ .001" (0.0254mm)	40 (144)	N (oz)
		20	@ .002" (0.0508mm)	10 (36)	N (oz)
8	Stroke Length, Typ			63.5 (2.5)	mm (in)
9	Linear Travel Accuracy			± 1 Step	
10	Steps per Revolution			48	
11	Ambient Temperature Range (operating)			-20 to +70 (-4 to +158)	°C (°F)
12	Maximum Coil Temperature			130 (266)	°C (°F)
13	Bearing Type			Ball Bearing	
14	Insulation Resistance at 500 VDC			20	Mohms
15	Dielectric Withstanding Voltage			650 for 2 seconds	VAC
16	Weight			85 (3)	g (oz)
17	Leadwire			AWG 26, UL 1429	

Notes: 1. All motor data values at 20° C unless otherwise specified – 2. # Voltage in case of voltage driver (indicator R•I)

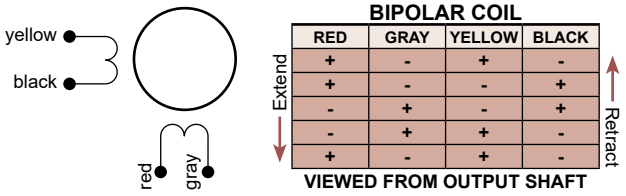

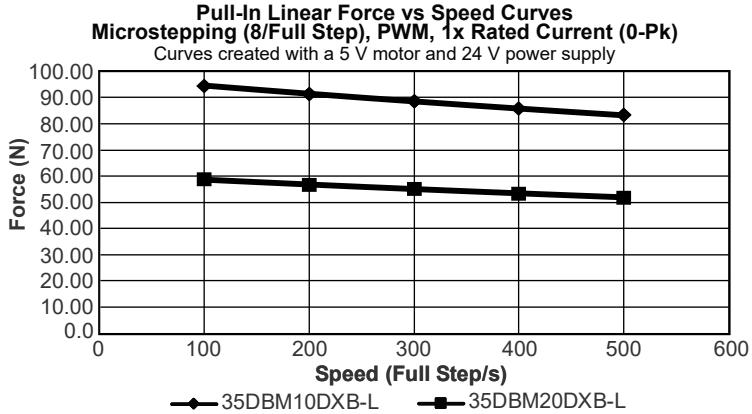

42DBL-K

Ø 42 mm • RoHS Compliant • 102.9 N

1. NOT RECOMMENDED TO USE AT THE FULLY RETRACTED AND EXTENDED POSITIONS.
2. SHAFT AXIAL BACKLASH: 0.15 [.006] MAX.

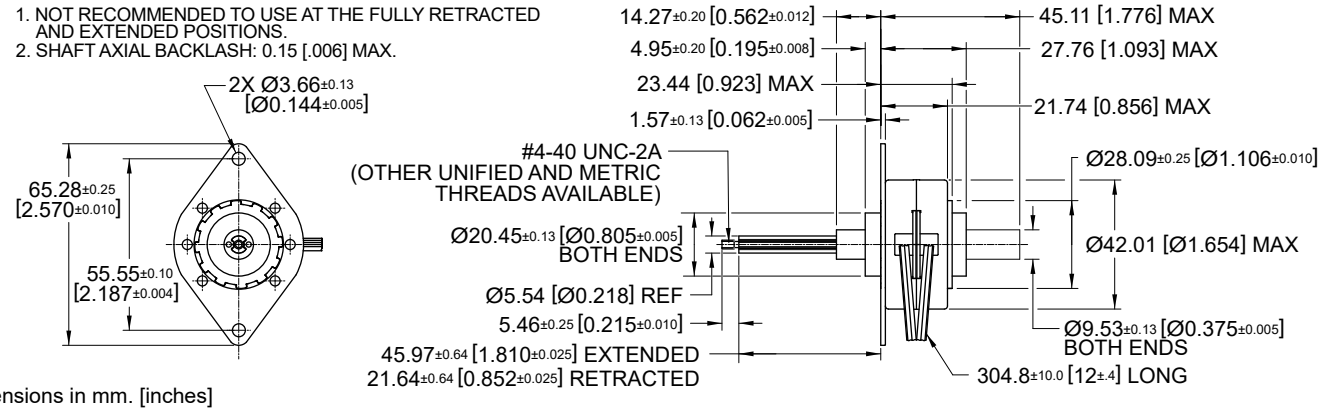

Dimensions in mm. [inches]

Electrical Data		42DBLXX•••-K C1B Bipolar	C2B Bipolar	C1U Unipolar	C2U Unipolar	Unit
1	Operating Voltage #	5	12	5	12	VDC
2	Resistance per Phase, ± 10%	5.0	28.8	5.0	28.8	Ohms
3	Inductance per Phase, typ	5.5	39.3	3.7	15.0	mH
4	Rated Current per Phase, 1 Phase ON	1.41	0.59	1.41	0.59	A
5	Input Power	10.0	10.0	10.0	10.0	W

General Data		XX	Linear travel per step			
6	Min. Holding Force @ rated current	10	@ .001" (0.0254mm)	102.9 (370)	100 (360)	N (oz)
		20	@ .002" (0.0508mm)	83.4 (300)	72.3 (260)	N (oz)
		40	@ .004" (0.1016mm)	55.6 (200)	50 (180)	N (oz)
7	Min. Holding Force (Unenergized)	10	@ .001" (0.0254mm)	100 (360)		N (oz)
		20	@ .002" (0.0508mm)	83.4 (300)		N (oz)
		40	@ .004" (0.1016mm)	19.5 (70)		N (oz)
8	Stroke Length, Typ			24.1 (0.95)		mm (in)
9	Linear Travel Accuracy			± 1 Step		
10	Steps per Revolution			48		
11	Ambient Temperature Range (operating)			-20 to +70 (-4 to +158)		°C (°F)
12	Maximum Coil Temperature			130 (266)		°C (°F)
13	Bearing Type			Ball Bearing		
14	Insulation Resistance at 500 VDC			20		Mohms
15	Dielectric Withstanding Voltage			650 for 2 seconds		VAC
16	Weight			156 (5.51)		g (oz)
17	Leadwire			AWG 26, UL 1430		

Notes: 1. All motor data values at 20° C unless otherwise specified – 2. # Voltage in case of voltage driver (indicator R•I)

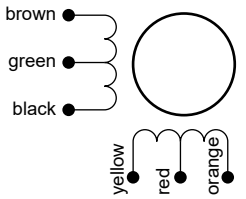

UNIPOLAR COIL

YELLOW	ORANGE	BROWN	BLACK	RED/GREEN	
+	-	+	-	+	Extend
+	-	-	+	+	
-	+	-	+	+	
-	+	+	-	+	
+	-	+	-	+	Retract

VIEWED FROM OUTPUT SHAFT

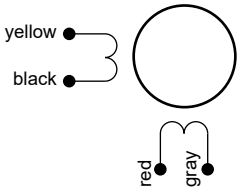

BIPOLAR COIL

RED	GRAY	YELLOW	BLACK	
+	-	+	-	Extend
+	-	-	+	
-	+	-	+	
-	+	+	-	
+	-	+	-	Retract

VIEWED FROM OUTPUT SHAFT

42DBLXXCXU-K/L

Typical Pull-in Linear Force vs Linear Rate at 20° C
Full Step, Unipolar, L/R Drive

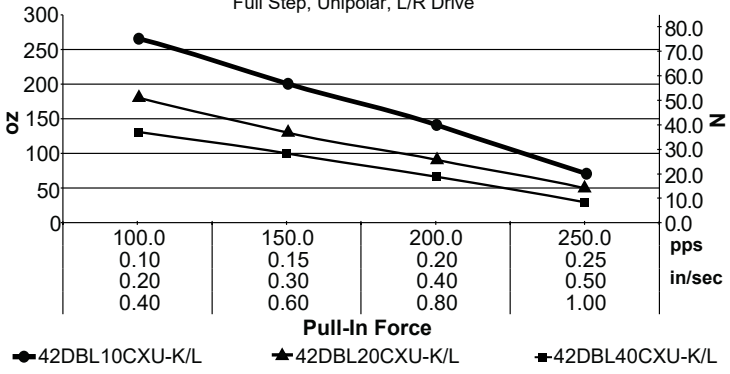

42DBLXXCXB-K/L

Typical Pull-in Linear Force vs Linear Rate at 20° C
Full Step, Bipolar, L/R Drive

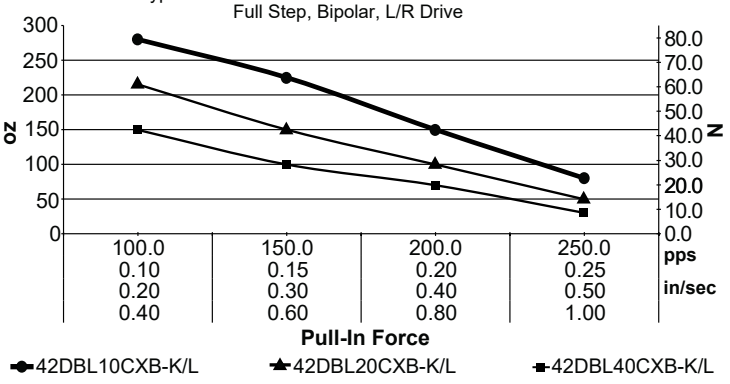

V092020 • © 2020 Portescap. Specifications subject to change without notice.

42DBL-L

Ø 42 mm • RoHS Compliant • 102.9 N

NOTES :
1. SHAFT AXIAL BACKLASH : 0.15 [.006] MAX.

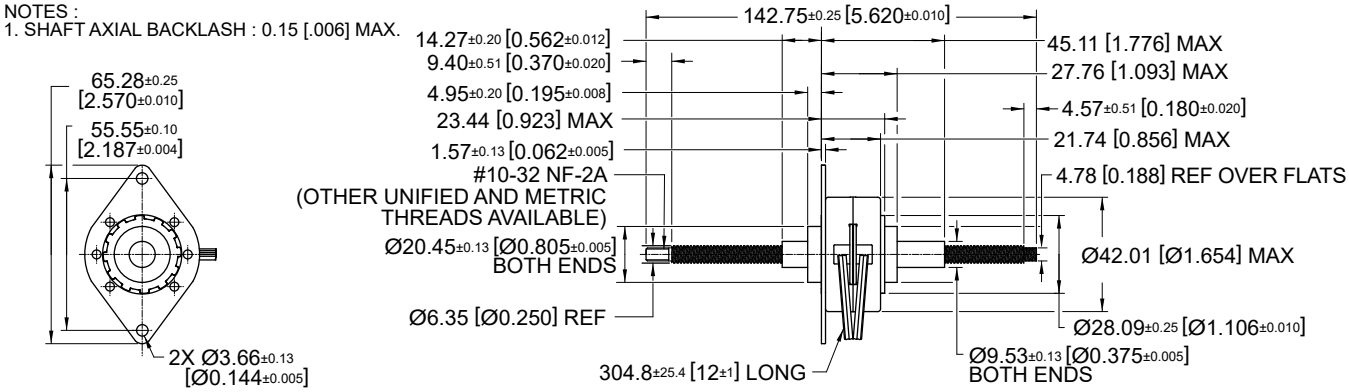

Dimensions in mm. [inches]

Electrical Data	42DBLXX•••-L C1B Bipolar	C2B Bipolar	C1U Unipolar	C2U Unipolar	Unit
1 Operating Voltage #	5	12	5	12	VDC
2 Resistance per Phase, ± 10%	5.0	28.8	5.0	28.8	Ohms
3 Inductance per Phase, typ	5.5	39.3	3.7	15.0	mH
4 Rated Current per Phase, 1 Phase ON	1.41	0.59	1.41	0.59	A
5 Input Power	10.0	10.0	10.0	10.0	W

General Data	XX	Linear travel per step			
6 Min. Holding Force @ rated current	10	@ .001" (0.0254mm)	102.9 (370)	100 (360)	N (oz)
	20	@ .002" (0.0508mm)	83.4 (300)	72.3 (260)	N (oz)
	40	@ .004" (0.1016mm)	55.6 (200)	50 (180)	N (oz)
7 Min. Holding Force (Unenergized)	10	@ .001" (0.0254mm)	100 (360)		N (oz)
	20	@ .002" (0.0508mm)	83.4 (300)		N (oz)
	40	@ .004" (0.1016mm)	19.5 (70)		N (oz)
8 Stroke Length, Typ			76.2 (3)		mm (in)
9 Linear Travel Accuracy			± 1 Step		
10 Steps per Revolution			48		
11 Ambient Temperature Range (operating)			-20 to +70 (-4 to +158)		°C (°F)
12 Maximum Coil Temperature			130 (266)		°C (°F)
13 Bearing Type			Ball Bearing		
14 Insulation Resistance at 500 VDC			20		Mohms
15 Dielectric Withstanding Voltage			650 for 2 seconds		VAC
16 Weight			156 (5.51)		g (oz)
17 Leadwire			AWG 26, UL 1430		

Notes: 1. All motor data values at 20° C unless otherwise specified – 2. # Voltage in case of voltage driver (indicator R•I)

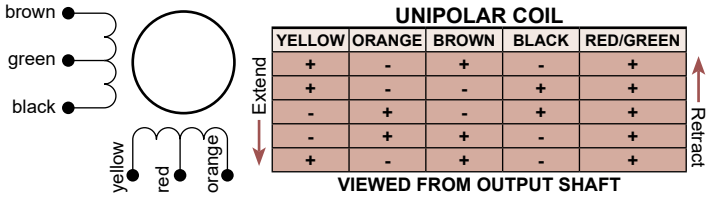

UNIPOLAR COIL

YELLOW	ORANGE	BROWN	BLACK	RED/GREEN	
+	-	+	-	+	Extend
+	-	-	+	+	
-	+	-	+	+	
-	+	+	-	+	
+	-	+	-	+	Retract

VIEWED FROM OUTPUT SHAFT

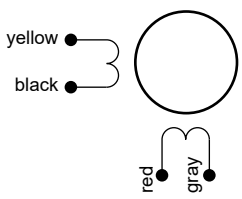

BIPOLAR COIL

RED	GRAY	YELLOW	BLACK	
+	-	+	-	Extend
+	-	-	+	
-	+	-	+	
-	+	+	-	
+	-	+	-	Retract

VIEWED FROM OUTPUT SHAFT

42DBLXXCXU-K/L
Typical Pull-in Linear Force vs Linear Rate at 20° C
Full Step, Unipolar, L/R Drive

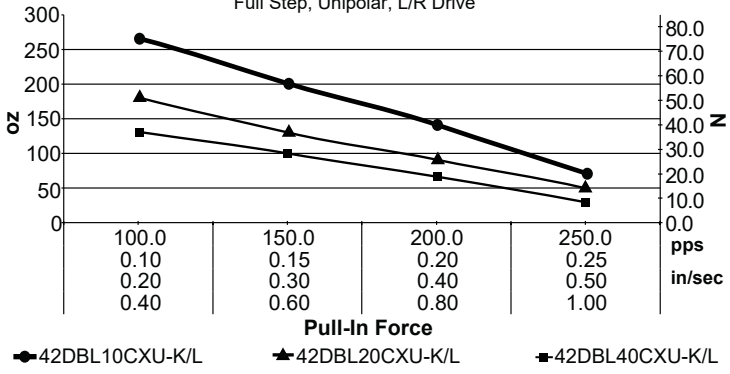

42DBLXXCXB-K/L
Typical Pull-in Linear Force vs Linear Rate at 20° C
Full Step, Bipolar, L/R Drive

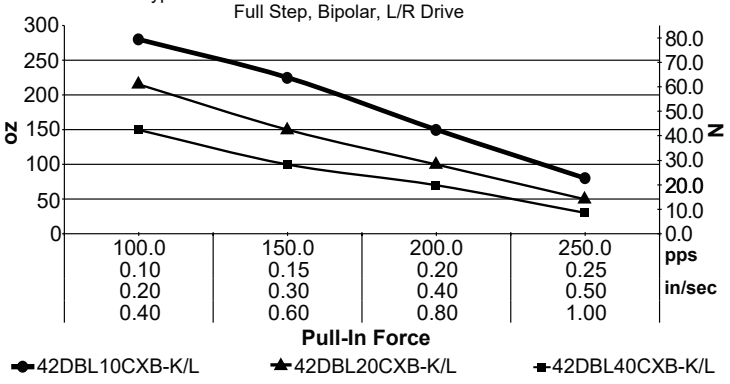

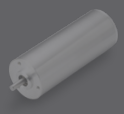
Brushless dc motors

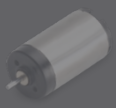
Brush dc motors

Disc magnet motors

Can stack motors

Can stack linear actuators

Gearheads

Encoders

Gearheads & Encoders

Gearheads

Gearheads are used between the motor and the load to reduce the speed and/or increase the torque delivered to the load with the best possible efficiency. We offer both planetary and spur gearheads, with each design offering advantages suited to particular applications.

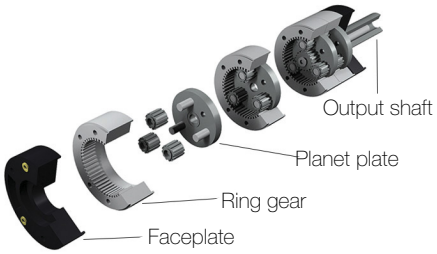

Spur and Planetary Gearheads

Type	Details	Application Advantages
Spur gear concept: Only one transmission point per train	• Low friction per train • Multiple trains can be configured to suit design intent • Input and output shaft not necessarily in line • Dual output shafts possible • Direction of rotation can be reversed by using an odd number of reduction stages	• Good efficiency, about 0.9 per train • Long gearbox of smaller diameter or short gearbox of large diameter • Free choice for placing the motor relative to the output shaft • Accommodates mounting of a sensor, potentiometer, etc. • Low noise
Planetary concept: 3 or 4 transmission points per train	• Higher reduction ratio per train, with a tradeoff of higher friction • Can transmit higher torques • Input and output of a train have the same direction of rotation • Less backlash	• Higher lifetime due to planetary arrangement • Efficiency about 0.85 per train • Exceptional performance in a very compact gearbox • For any number of trains, the load always rotates in the same direction as the motor • Less shock in case of a rapid reversal of motor rotation

Encoders

Encoders provide feedback for accurate control of speed and positioning. We offer three types – optical, magnetic and magnetoresistive – all featuring a robust design suitable for severe environments. Resolutions from 1 to 1024 lines per revolution are available, with up to 3 channels.

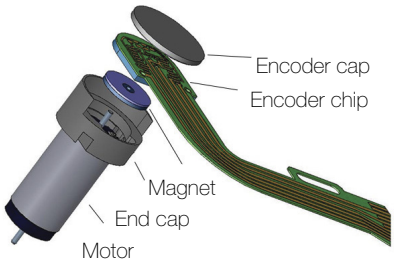

Optical, Magnetic and Magnetoresistive Encoders

Type	Details / Features		Advantages for Application
Optical	• Transmissive optical system • 3 Channel (A, B, Z) • Optional line driver	• High accuracy • High line count • Ultra low jitter	• Very precise positioning • No sensitivity to external magnetic field
Magnetic: M-Sense	• Hall sensor array interpolated • 3 Channel (A, B, Z) • Integrated RS422 line driver	• Integrated design • High line count	• High resolution in a compact design and low diameter • Long commutation lines can be handled between encoder and driver • Axial and radial cable output
Magnetic: MR2	• Magnetoresistive sensor interpolated • 3 Channel (A, B, Z) • Integrated design	• Compact design • High line count	• Insensitive to temperature • Very low sensitivity to unwanted external field • High resolution in a shorter length
Magnetic: Type D/F	• Digital Hall sensor (not interpolated) • 2 Channel (A, B) • Insensititve to hostile environment	• Compact design • Negligible unit length increase for Type F • Very low current consumption	• Very low power consumption • Gamma ray-proof version available on request

Gearheads and Encoders for any Miniature Application

Medical devices & clinical diagnostics
- Surgical hand tools
- Laboratory automation
- Infusion systems
- Insulin pumps
- Medical analyzers
- Sample preparation workstations

Aerospace
- Surveillance camera systems
- Seat actuation
- Valve actuation

Other
- Nailers & framing systems
- Power hand tools

Meet your Application's Working Point Requirements

Gearheads

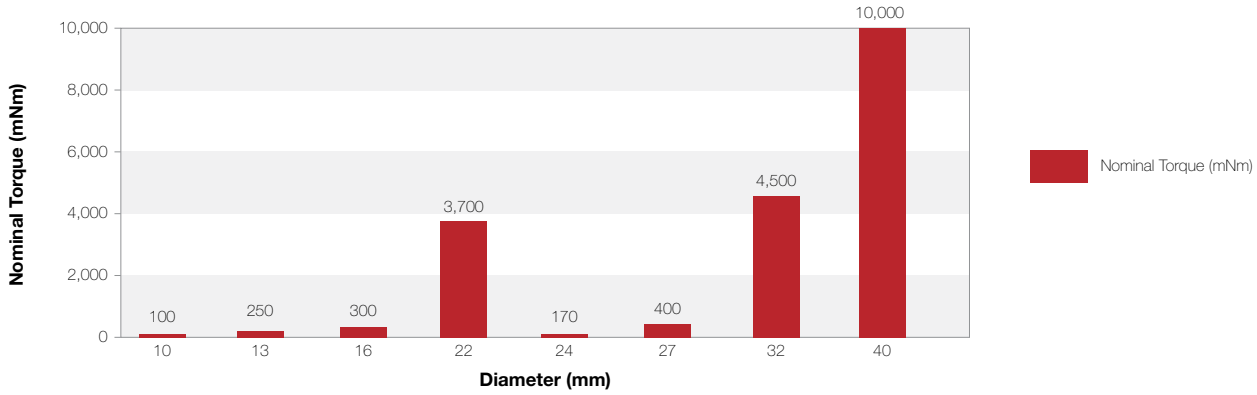

Encoders

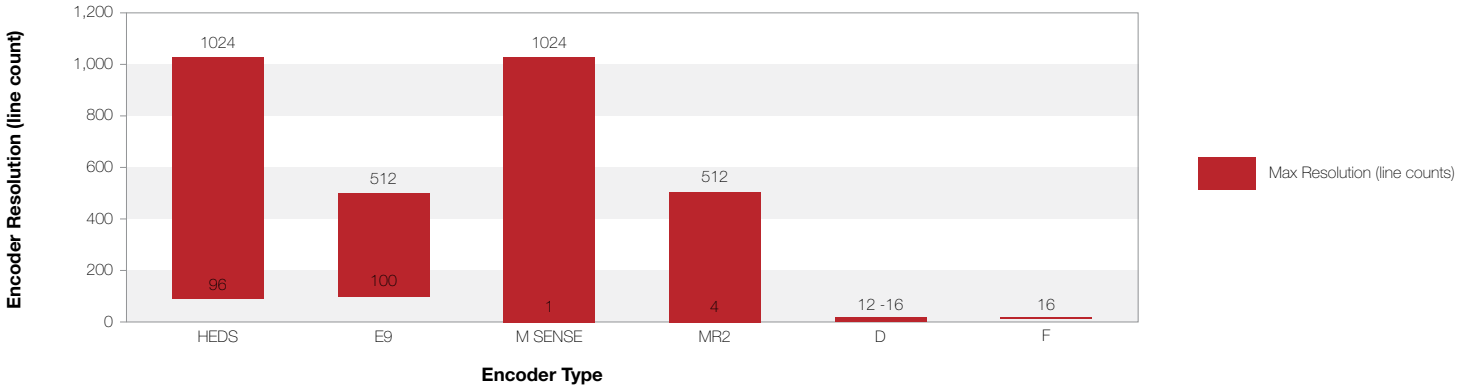

For complete product and application details, visit
portescap.com/gearheads-encoders

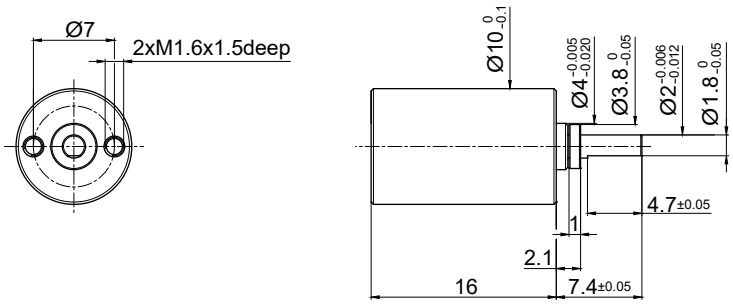

Dimensions in mm.

Ratio		4*	16	64	256*	1024*	4096*
1	Number of Gear Stages	1	2	3	4	5	6
2	Direction of Rotation	=	=	=	=	=	=
3	Efficiency	0.9	0.8	0.7	0.65	0.6	0.5
4	L (mm)	9	12.5	16	19.5	23	26.5
5	Weight g	3	4	5	6	7	8
	Weight (oz)	(0.105)	(0.141)	(0.176)	(0.211)	(0.246)	(0.282)
6	**Available with Motor – L2 - Length with motor (mm)**						
	08GS61	25.6	29.1	32.6	36.1	39.6	43.1
	P010	25.4	28.9	32.4	35.9	39.4	42.9
	10NS61	27	30.5	34	37.5	41	44.5
	12G88	37.2	40.7	44.2	47.7	51.2	54.7

*Ratio available upon request. Please contact us.

Characteristics		Unit	R10 • 200 • ····
7	Shaft Bearings		Sleeve
8	Maximum Static Torque	Nm (oz-in)	0.15 (21.2)
9	Maximum Radial Force		
	@ 8mm from mounting face	N (lb)	2 (0.45)
10	Maximum Axial Force	N (lb)	5 (1.125)
11	Maximum Press Fit Force	N (lb)	10 (2.25)
12	Average Backlash @ no-load		1°
13	Average Backlash @ 0.3 Nm		3°
	Shaft Play:		
14	-radial	µm	≤ 25
15	-axial	µm	50-150
16	Maximum Recommended Input Speed	rpm	10,000
17	Operating Temperature Range:	°C (°F)	-30 to +65 (-22 to +150)

Motor + Gearbox = L2

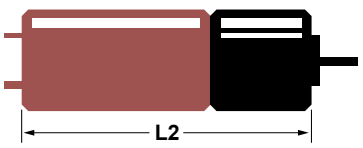

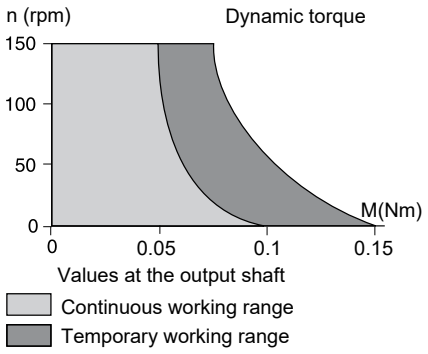

V092020 • © 2020 Portescap. Specifications subject to change without notice.

R13

Ø 13 mm • Planetary Gearbox • 0.25 Nm

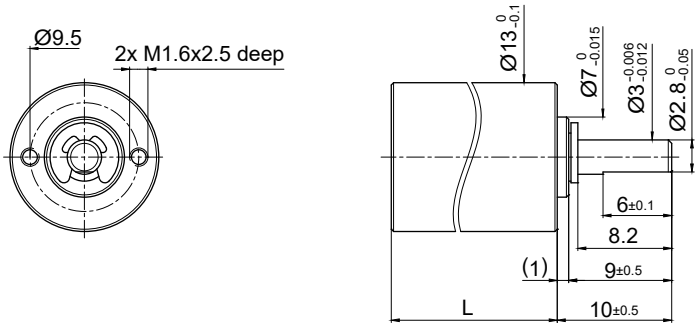

Dimensions in mm.

Ratio		5.5	22	30.2	88	121	166	352	484	665.5	915
1	Number of Gear Stages	1	2	2	3	3	3	4	4	4	4
2	Direction of Rotation	=	=	=	=	=	=	=	=	=	=
3	Efficiency	0.85	0.75	0.75	0.65	0.65	0.65	0.55	0.55	0.55	0.55
4	L (mm)	14.5	18.6	18.6	22.7	22.7	22.7	26.8	26.8	26.8	26.8
5	Weight g	6	9	9	12	12	12	15	15	15	15
	(oz)	(0.211)	(0.317)	(0.317)	(0.423)	(0.423)	(0.423)	(0.529)	(0.529)	(0.529)	(0.529)
6	**Available with Motor – L2 - Length with motor (mm)**										
	13N 88	42.7	46.8	46.8	50.9	50.9	50.9	55	55	55	55
	12G 88	42.7	46.8	46.8	50.9	50.9	50.9	55	55	55	55

Characteristics		Unit	R13 • 0 • ····	R13 2R • 0 • ····
7	Shaft Bearings		Sleeve	Ball Bearing
8	Maximum Static Torque	Nm (oz-in)	0.5 (71)	0.5 (71)
9	Maximum Radial Force			
	@ 8mm from mounting face	N (lb)	5 (1.12)	20 (4.5)
10	Maximum Axial Force	N (lb)	8 (1.8)	10 (2.2)
11	Maximum Press Fit Force	N (lb)	100 (23)	100 (23)
12	Average Backlash @ no-load		1.25°	1.25°
13	Average Backlash @ 0.3 Nm		2°	2°
	Shaft Play:			
14	-radial	µm	≤ 20	≤ 10
15	-axial	µm	50-150	≤50
16	Maximum Recommended Input Speed	rpm	7,500	7,500
17	Operating Temperature Range:	°C (°F)	-30 to +65 (-22 to +150)	

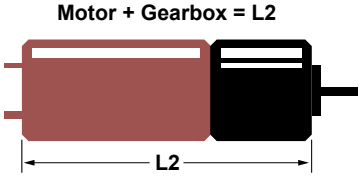

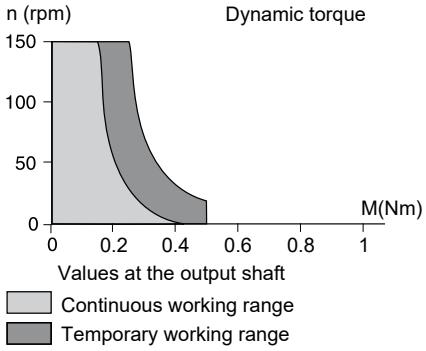

B16

Ø 16 mm • 0.06 Nm

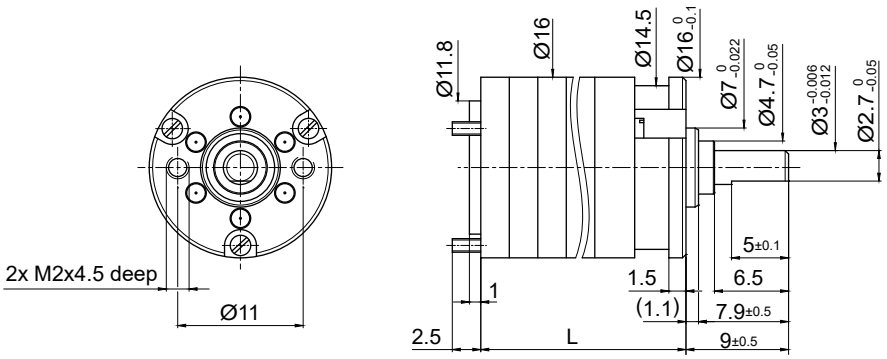

Dimensions in mm.

Ratio		5	9	15	27	45	81	135	141	243	405	729	1215	2187
1	Number of Gear Stages	2	2	3	3	4	4	5	5	5	6	6	7	7
2	Direction of Rotation	=	=	≠	≠	=	=	≠	≠	≠	=	=	≠	≠
3	Efficiency	0.81	0.81	0.73	0.73	0.65	0.65	0.59	0.59	0.59	0.53	0.53	0.48	0.48
4	L (mm)	10.5	10.5	13	13	15.5	15.5	18	18	18	20.5	20.5	23	23
5	Weight g	7	7	8	8	9	9	10	10	10	11	11	12	12
	(oz)	(0.246)	(0.246)	(0.282)	(0.282)	(0.317)	(0.317)	(0.352)	(0.352)	(0.352)	(0.388)	(0.388)	(0.423)	(0.423)
6	**Available with Motor – L2 - Length with motor (mm)**													
	16C18	29.2	29.2	31.7	31.7	34.2	34.2	36.7	36.7	36.7	39.2	39.2	41.7	41.7
	16N78	41.5	41.5	44	44	46.5	46.5	49	49	49	51.5	51.5	54	54
	16G88	41.5	41.5	44	44	46.5	46.5	49	49	49	51.5	51.5	54	54
	17S78	32.2	32.2	34.7	34.7	37.2	37.2	39.7	39.7	39.7	42.2	42.2	44.7	44.7
	17N78	39.4	39.4	41.9	41.9	44.4	44.4	47.9	47.9	47.9	49.4	49.4	51.9	51.9
	P110	29.5	29.5	32	32	34.5	34.5	37	37	37	39.5	39.5	42	42
	16DCP/16DCT/17DCT CB	39.5	39.5	42	42	44.5	44.5	47	47	47	49.5	49.5	52	52
	16DCP/16DCT/17DCT PM	39	39	41.5	41.5	44	44	46.5	46.5	46.5	49	49	51.5	51.5

Characteristics		5	B16 • 0 • ····	B16 2R • 0 • ····
7	Shaft Bearings		Sleeve	Ball Bearing
8	Maximum Static Torque	Nm (oz-in)	0.3 (42)	0.3 (42)
9	Maximum Radial Force			
	@ 8mm from mounting face	N (lb)	5 (1.1)	10 (2.2)
10	Maximum Axial Force	N (lb)	5 (1.1)	10 (2.2)
11	Maximum Press Fit Force	N (lb)	100 (23)	100 (23)
12	Average Backlash @ no-load		1.5°	1.5°
13	Average Backlash @ 0.3 Nm		3°	3°
	Shaft Play:			
14	-radial	µm	≤ 20	≤ 10
15	-axial	µm	50-150	≤ 100
16	Maximum Recommended Input Speed	rpm	8000	8000
17	Operating Temperature Range:	°C (°F)	-30 to +65 (-22 to +150)	

Motor + Gearbox = L2

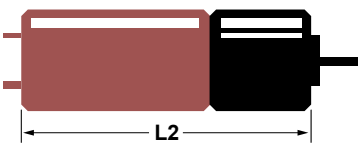

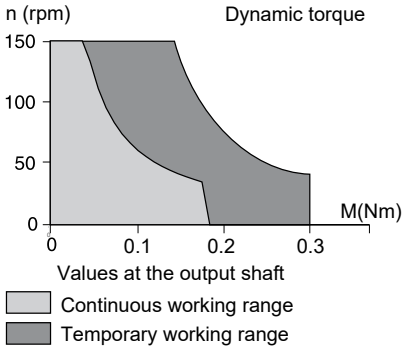

V092020 • © 2020 Portescap. Specifications subject to change without notice.

BA16

Ø 16 mm • Gearbox with Spur Gear and Planetary Output • 0.2 Nm

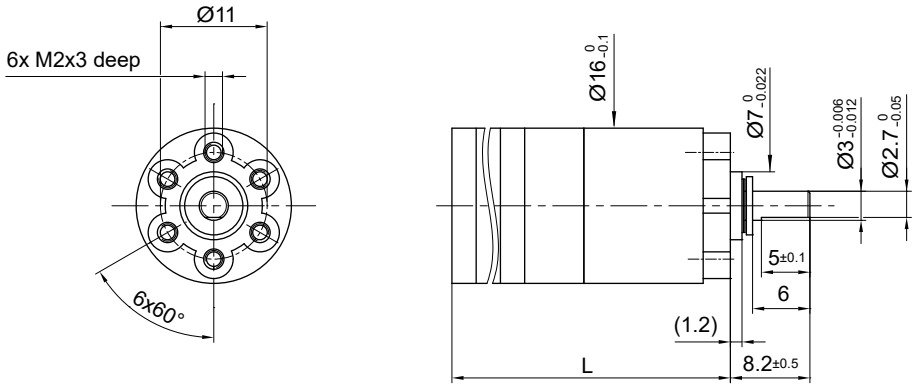

Dimensions in mm.

Ratio			22.5	40.5	67.5	121.5	202.5	243	364.5	607.8	1093.5	1822.5	3280.5
1	Number of Gear Stages		3	3	4	4	5	5	5	6	6	7	7
2	Direction of Rotation		=	=	≠	≠	=	=	=	≠	≠	=	=
3	Efficiency		0.72	0.72	0.65	0.65	0.59	0.59	0.59	0.53	0.53	0.48	0.48
4	L (mm)		26.7	26.7	29.2	29.2	31.7	31.7	31.7	34.2	34.2	36.7	36.7
5	Weight	g	12	12	13	13	14	14	15	15	15	16	16
		(oz)	(0.423)	(0.423)	(0.458)	(0.458)	(0.493)	(0.493)	(0.529)	(0.529)	(0.529)	(0.564)	(0.564)
6	**Available with Motor – L2 - Length with motor (mm)**												
	16C18		45.4	45.4	47.9	47.9	51.4	51.4	51.4	52.9	52.9	55.4	55.4
	16N78		54.7	54.7	57.2	57.2	59.7	59.7	59.7	62.2	62.2	64.7	64.7
	16G88		54.7	54.7	57.2	57.2	59.7	59.7	59.7	62.2	62.2	64.7	64.7
	17S78		48.4	48.4	50.9	50.9	53.4	53.4	53.4	55.9	55.9	58.4	58.4
	17N78		52.6	52.6	55.1	55.1	57.6	57.6	57.6	60.1	60.1	62.6	62.6
	P110		45.7	45.7	48.2	48.2	50.7	50.7	50.7	53.2	53.2	55.7	55.7
	16DCP/16DCT/17DCT CB		52.7	52.7	55.2	55.2	57.7	57.7	57.7	60.2	60.2	62.7	62.7
	16DCP/16DCT/17DCT PM		52.2	52.2	54.7	54.7	57.2	57.2	57.2	59.7	59.7	62.2	62.2

Characteristics		Unit	BA16 • 0 • ····	BA16 2R • 0 • ····
7	Shaft Bearings		Sleeve	Ball Bearing
8	Maximum Static Torque	Nm (oz-in)	0.4 (57)	0.4 (56)
9	Maximum Radial Force			
	@ 8mm from mounting face	N (lb)	5 (1.1)	15 (3.3)
10	Maximum Axial Force	N (lb)	5 (1.1)	10 (2.2)
11	Maximum Press Fit Force	N (lb)	200 (44)	200 (44)
12	Average Backlash @ no-load		1.5°	1.5°
13	Average Backlash @ 0.3 Nm		3°	3°
	Shaft Play:			
14	-radial	µm	≤ 30	≤ 10
15	-axial	µm	≤ 150	≤ 100
16	Maximum Recommended Input Speed	rpm	8000	8000
17	Operating Temperature Range:	°C (°F)	-30 to +65 (-22 to +150)	

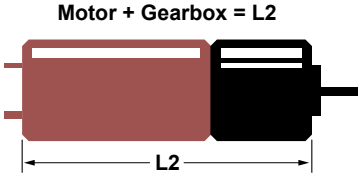

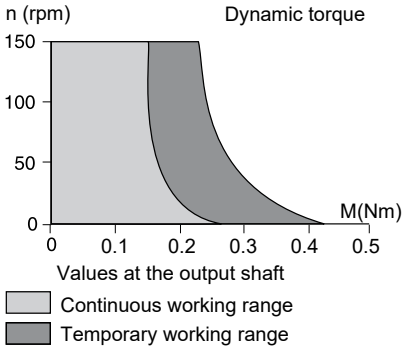

R16

Ø 16 mm • Planetary Gearbox • 0.3 Nm

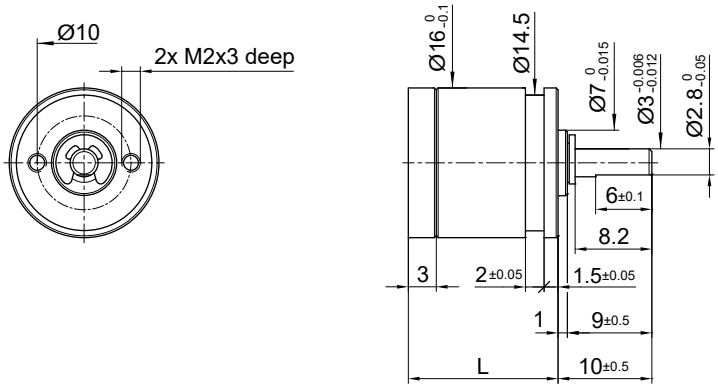

Dimensions in mm.

Ratio			5.5	22	30.2	88	121	166	352	484	665.5	915
1	Number of Gear Stages		1	2	2	3	3	3	4	4	4	4
2	Direction of Rotation		=	=	=	=	=	=	=	=	=	=
3	Efficiency		0.85	0.75	0.75	0.65	0.65	0.65	0.55	0.55	0.55	0.55
4	L (mm)		16	20.1	20.1	24.2	24.2	24.2	28.3	28.3	28.3	28.3
5	Weight	g	10	13	13	16	16	16	19	19	19	19
		(oz)	(0.352)	(0.458)	(0.458)	(0.564)	(0.564)	(0.564)	(0.670)	(0.670)	(0.670)	(0.670)
6	**Available with Motor – L2 - Length with motor (mm)**											
	16C18		31.7	35.8	35.8	39.9	39.9	39.9	44	44	44	44
	16N78		44	48.1	48.1	52.2	52.2	52.2	56.3	56.3	56.3	56.3
	16G88		44	48.1	48.1	52.2	52.2	52.2	56.3	56.3	56.3	56.3
	17S78		34.7	38.8	38.8	42.9	42.9	42.9	47	47	47	47
	17N78		41.9	46	46	50.1	50.1	50.1	54.2	54.2	54.2	54.2
	P110		35	39.1	39.1	43.2	43.2	43.2	47.3	47.3	47.3	47.3
	16DCP/16DCT/17DCT CB		42	46.1	46.1	50.2	50.2	50.2	54.3	54.3	54.3	54.3
	16DCP/16DCT/17DCT PM		41.5	45.6	45.6	49.7	49.7	49.7	53.8	53.8	53.8	53.8
	16ECP36		50.5	54.6	54.6	58.7	58.7	58.7	62.8	62.8	62.8	62.8
	16ECP52		66.5	70.6	70.6	74.7	74.7	74.7	78.8	78.8	78.8	78.8
	32BF		27.2	31.3	31.3	35.4	35.4	35.4	39.5	39.5	39.5	39.5

Characteristics		Unit	R16 • 0 • ····	R16 2R • 0 • ····
7	Shaft Bearings		Sleeve	Ball Bearing
8	Maximum Static Torque	Nm (oz-in)	1 (141)	1 (141)
9	Maximum Radial Force			
	@ 8mm from mounting face	N (lb)	5 (1.12)	20 (4.5)
10	Maximum Axial Force	N (lb)	8 (1.8)	10 (2.2)
11	Maximum Press Fit Force	N (lb)	100 (23)	100 (23)
12	Average Backlash @ no-load		1.25°	1.25°
13	Average Backlash @ 0.3 Nm		2°	2°
	Shaft Play:			
14	-radial	µm	≤ 20	≤ 10
15	-axial	µm	50-150	≤ 50
16	Maximum Recommended Input Speed	rpm	7,500	7,500
17	Operating Temperature Range:	°C (°F)	-30 to +65 (-22 to +150)	

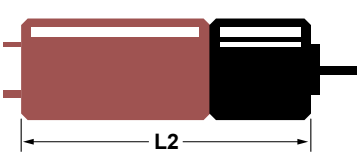

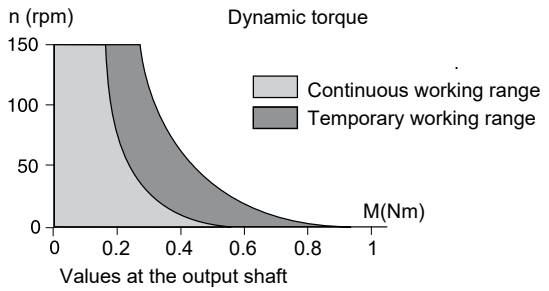

V092020 • © 2020 Portescap. Specifications subject to change without notice.

R22

Ø 22 mm • Planetary Gearbox • 0.6 Nm

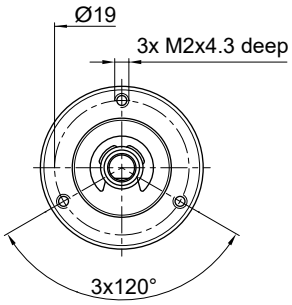

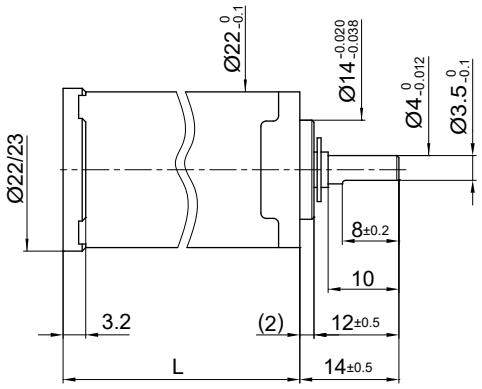

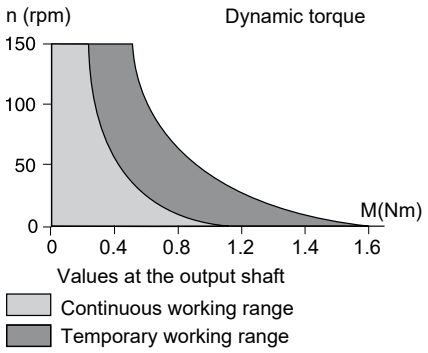

Dimensions in mm.

Ratio			5.75	16.2	19.4	27.6	33.1	65.5	93.2	111	132	159	190	376	641	1090
1	Number of Gear Stages		1	2	2	2	2	3	3	3	3	3	3	4	4	4
2	Direction of Rotation		=	=	=	=	=	=	=	=	=	=	=	=	=	=
3	Efficiency		0.8	0.7	0.7	0.7	0.7	0.6	0.6	0.6	0.6	0.6	0.6	0.5	0.5	0.5
4	L (mm)		25	32.5	32.5	32.5	32.5	40	40	40	40	40	40	40	40	40
5	Weight	g	20	25	25	25	25	30	30	30	30	30	30	33	33	33
		(oz)	(0.705)	(0.881)	(0.881)	(0.881)	(0.881)	(0.881)	(1.058)	(1.058)	(1.058)	(1.058)	(1.058)	(1.164)	(1.164)	(1.164)
6	**Available with Motor – L2 - Length with motor (mm)**															
	22S78		51	58.5	58.5	58.5	58.5	66	66	66	66	66	66	66	66	66
	22N78		57	64.5	64.5	64.5	64.5	72	72	72	72	72	72	72	72	72
	23GST82		60.1	67.6	67.6	67.6	67.6	75.1	75.1	75.1	75.1	75.1	75.1	75.1	75.1	75.1
	26N58		68.3	75.8	75.8	75.8	75.8	83.3	83.3	83.3	83.3	83.3	83.3	83.3	83.3	83.3
	26N48		67.1	74.6	74.6	74.6	74.6	82.1	82.1	82.1	82.1	82.1	82.1	82.1	82.1	82.1
	28L18/28		68.5	76	76	76	76	83.5	83.5	83.5	83.5	83.5	83.5	83.5	83.5	83.5
	28LT12		66.2	73.7	73.7	73.7	73.7	81.2	81.2	81.2	81.2	81.2	81.2	81.2	81.2	81.2
	P310		42.4	49.9	49.9	49.9	49.9	57.4	57.4	57.4	57.4	57.4	57.4	57.4	57.4	57.4
	22DCP/22DCT/24DCT		55*	62.5	62.5	62.5	62.5	70	70*	70	70	70	70	70	70	70
	22ECP35 / 22ECT35		60	67.5	67.5	67.5	67.5	75	75	75	75	75	75	75	75	75
	22ECP45		70	77.5	77.5	77.5	77.5	85	85	85	85	85	85	85	85	85
	22ECT48		73	80.5	80.5	80.5	80.5	88	88	88	88	88	88	88	88	88
	22ECP60 / 22ECT60		85	92.5	92.5	92.5	92.5	100	100	100	100	100	100	100	100	100
	22ECT82		107	114.5	114.5	114.5	114.5	122	122	122	122	122	122	122	122	122

Characteristics		Unit	R22 • 0 • ····	R22 2R • 0 • ····
7	Shaft Bearings		Sleeve	Ball Bearing
8	Maximum Static Torque	Nm (oz-in)	2 (283)	2 (283)
9	Maximum Radial Force			
	@ 8mm from mounting face	N (lb)	10 (2.2)	15 (3.3)
10	Maximum Axial Force	N (lb)	10 (2.2)	10 (2.2)
11	Maximum Press Fit Force	N (lb)	300 (67.4)	300 (67.4)
12	Average Backlash @ no-load		1.5°	1.5°
13	Average Backlash @ 0.3 Nm		3°	3°
	Shaft Play:			
14	-radial	µm	≤ 25	≤ 10
15	-axial	µm	50-150	50-150
16	Maximum Recommended Input Speed	rpm	5,000	5,000
17	Operating Temperature Range:	°C (°F)	-30 to +65 (-22 to +150)	

Motor + Gearbox = L2

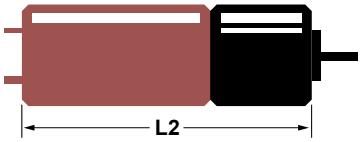

R22HT

Ø 22 mm • Planetary Gearbox • 3.7 Nm

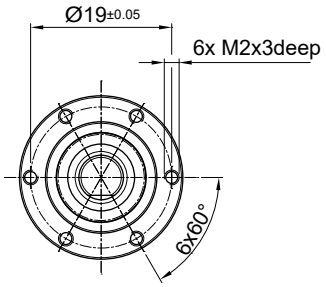

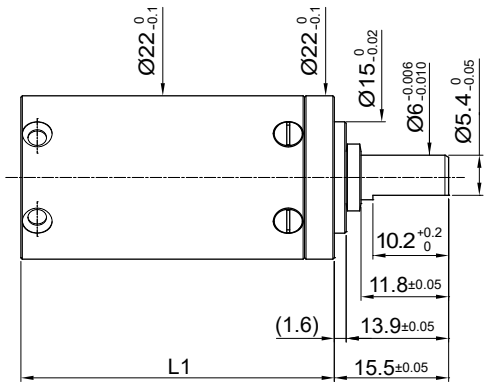

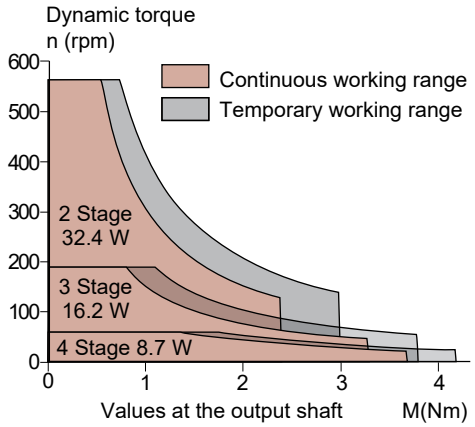

Dimensions in mm.

	Ratio		10.9 12.4 14.1 14.5	16.4 17.9 19.2 20.2 23.7 29.2	36.5 41.2 46.6 48.2 52.7 54.5 59.4	61.7 63.7 67.1 72.1 75.9 78.5 84.3	88.8 96.7 103.8 109.4 127.9 157.5	120.9 136.7 154.6 159.8 174.8 180.8 196.8 197.8 204.4	211.4 222.6 231.2 239.0 251.8 260.3 270.3 279.5 284.8	294.4 316.1 320.6 333.0 344.2 362.6 369.6 389.3 410.1	423.9 455.2 479.5 522.1 560.6 590.5 690.4 850.3
1	Number of Gear Stages		2	2	3	3	3	4	4	4	4
2	Direction of Rotation		=	=	=	=	=	=	=	=	=
3	Efficiency		0.82	0.82	0.72	0.72	0.72	0.62	0.62	0.62	0.62
4	L (mm)		28.3	28.3	35.1	35.1	35.1	41.9	41.9	41.9	41.9
5	Weight	g (oz)	52 (1.834)	52 (1.834)	66 (2.328)	66 (2.328)	66 (2.328)	81 (2.857)	81 (2.857)	81 (2.857)	81 (2.857)
6	**Available with Motor – L2 - Length with motor (mm)**										
	22DCP / 22DCT / 22N78 / 24DCT		62.7	62.7	69.5	69.5	69.5	76.3	76.3	76.3	76.3
	22N98		64.6	64.6	71.4	71.4	71.4	78.2	78.2	78.2	78.2
	23GST2R		68.7	68.7	75.5	75.5	75.5	82.3	82.3	82.3	82.3
	25GT2R		84.2	84.2	91	91	91	97.8	97.8	97.8	97.8
	25GST2R		74.2	74.2	81	81	81	87.8	87.8	87.8	87.8
	22ECT35		63.3	63.3	70.1	70.1	70.1	76.9	76.9	76.9	76.9
	22ECP45		73.3	73.3	80.1	80.1	80.1	86.9	86.9	86.9	86.9
	22ECT48		76.3	76.3	83.1	83.1	83.1	89.9	89.9	89.9	89.9
	22ECP60 / 22ECT60		88.3	88.3	95.1	95.1	95.1	101.9	101.9	101.9	101.9
	22ECT82		110.3	110.3	117.1	117.1	117.1	123.9	123.9	123.9	123.9

	Characteristics	Unit	R22HT 2R . 0 .								
7	Shaft Bearings		Ball bearing								
8	Maximum Continuous Torque	Nm (oz-in)	2.4 (340)	2.4 (340)	3.3 (467)	3.3 (467)	3.3 (467)	3.7 (524)	3.7 (524)	3.7 (524)	3.7 (524)
9	Maximum Continuous Power	W	32.4	32.4	16.2	16.2	16.2	8.7	8.7	8.7	8.7
10	Maximum Static Torque	N (lb)	3 (425)	3 (425)	3.8 (538)	3.8 (538)	3.8 (538)	4.2 (595)	4.2 (595)	4.2 (595)	4.2 (595)
11	Maximum Radial Force @ 10 mm from mounting face	N (lb)	150 (33.7)								
12	Maximum Axial Force	N (lb)	100 (22.4)								
13	Maximum Press-Fit Force	N (lb)	120 (26.9)								
14	Average Backlash @ no-load	(deg)	1.2°	1.2°	1.6°	1.6°	1.6°	1.9°	1.9°	1.9°	1.9°
15	Shaft Play:										
	-Radial (@ 10 mm from flange)	µm	≤ 200								
	-Axial	µm	<30								
16	Maximum Recommended Input Speed	rpm	12,000								
17	Operating Temperature Range:	°C (°F)	-30 to +85 (-22 to +185)								

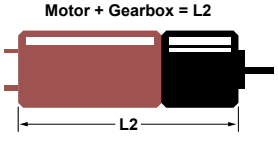

V092020 • © 2020 Portescap. Specifications subject to change without notice.

K24

Ø 24 mm • Spur Gearbox • 0.17 Nm

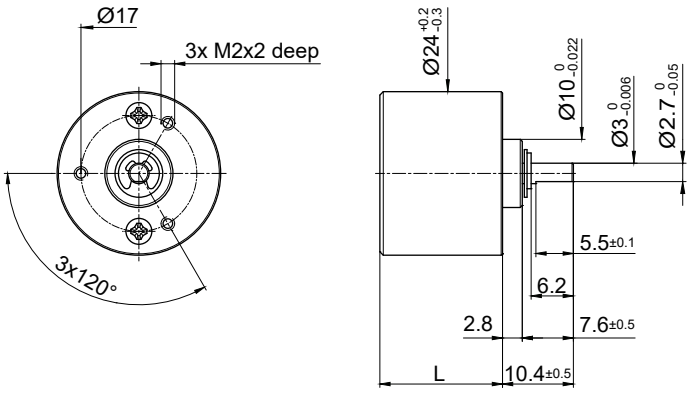

Dimensions in mm.

Ratio		5	8	20	32	64	128	320	800	2048
1	Number of Gear Stages	2	2	4	4	4	4	6	6	6
2	Direction of Rotation	=	=	=	=	=	=	=	=	=
3	Efficiency	0.85	0.85	0.75	0.75	0.75	0.75	0.65	0.65	0.65
4	L (mm)	15	15	18	18	18	18	21	21	21
5	Weight g	15	15	18	18	18	18	21	21	21
	(oz)	(0.529)	(0.529)	(0.634)	(0.634)	(0.634)	(0.634)	(0.705)	(0.705)	(0.705)
6	**Available with Motor – L2 - Length with motor (mm)**									
	22N78	47	47	50	50	50	50	53	53	53
	22N98	48.9	48.9	51.9	51.9	51.9	51.9	54.9	54.9	54.9
	26N58	58.3	58.3	61.3	61.3	61.3	61.3	64.3	64.3	64.3
	26N48	57.1	57.1	60.1	60.1	60.1	60.1	63.1	63.1	63.1
	P310	32.4	32.4	35.4	35.4	35.4	35.4	38.4	38.4	38.4
	22DCP/22DCT/24DCT	50.2	50.2	53.2	53.2	53.2	53.2	56.2	56.2	56.2

Characteristics		Unit	K24 • 0 • ····	K24 2R • 0 • ····
7	Shaft Bearings		Sleeve	Ball Bearing
8	Maximum Static Torque	Nm (oz-in)	0.7 (100)	0.7 (100)
9	Maximum Radial Force			
	@ 8mm from mounting face	N (lb)	5 (1.1)	20 (4.5)
10	Maximum Axial Force	N (lb)	8 (1.8)	10 (2.2)
11	Maximum Press Fit Force	N (lb)	30 (6.7)	30 (6.7)
12	Average Backlash @ no-load		1.5°	1.5°
13	Average Backlash @ 0.3 Nm		2.5°	2.5°
	Shaft Play:			
14	-radial	µm	≤ 40	≤ 10
15	-axial	µm	50-150	≤ 10
16	Maximum Recommended Input Speed	rpm	5,000	5,000
17	Operating Temperature Range:	°C (°F)	-30 to +65 (-22 to +150)	

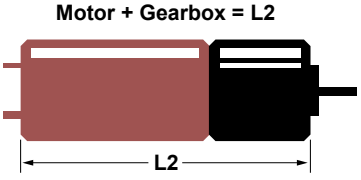

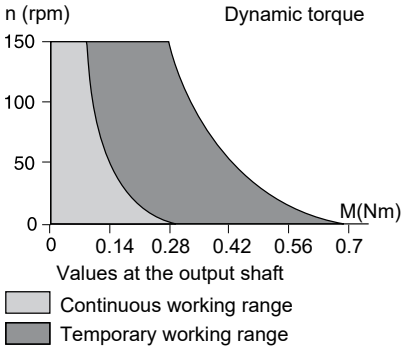

K27

Ø 27 mm • Spur Gearbox • 0.4 Nm

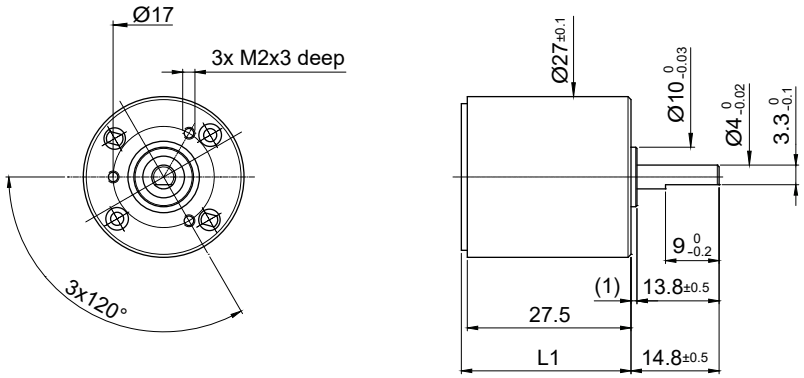

Dimensions in mm.

Ratio		6.2	18.6	27.9	55.7	99.1	198	501	979	2970
1	Number of Gear Stages	4	4	4	4	6	6	6	6	9
2	Direction of Rotation	=	=	=	=	=	=	=	=	≠
3	Efficiency	0.65	0.65	0.65	0.65	0.55	0.55	0.55	0.55	0.4
4	L (mm)	28.5	28.5	28.5	28.5	28.5	28.5	28.5	28.5	28.5
5	Weight g	40	40	40	40	42	42	42	42	48
	(oz)	(1.410)	(1.410)	(1.410)	(1.410)	(1.481)	(1.481)	(1.481)	(1.481)	(1.693)
6	**Available with Motor – L2 - Length with motor (mm)**									
	22N78	60.5	60.5	60.5	60.5	60.5	60.5	60.5	60.5	60.5
	22N98	62.4	62.4	62.4	62.4	62.4	62.4	62.4	62.4	62.4
	23GST82	63.6	63.6	63.6	63.6	63.6	63.6	63.6	63.6	63.6
	26N58	71.8	71.8	71.8	71.8	71.8	71.8	71.8	71.8	71.8
	26N48	70.6	70.6	70.6	70.6	70.6	70.6	70.6	70.6	70.6
	P310	45.9	45.9	45.9	45.9	45.9	45.9	45.9	45.9	45.9
	22DCP/22DCT/24DCT	60.5	60.5	60.5	60.5	60.5	60.5	60.5	60.5	60.5

Characteristics		Unit	K27 • 0 • ····	K27 2R • 0 • ····
7	Shaft Bearings		Sleeve	Ball Bearing
8	Maximum Static Torque	Nm (oz-in)	0.7 (100)	0.7 (100)
9	Maximum Radial Force			
	@ 8mm from mounting face	N (lb)	20 (4.5)	25 (5.5)
10	Maximum Axial Force	N (lb)	8 (1.8)	40 (9)
11	Maximum Press Fit Force	N (lb)	300 (67.5)	60 (13.5)
12	Average Backlash @ no-load		2°	2°
13	Average Backlash @ 0.3 Nm		3°	3°
	Shaft Play:			
14	-radial	µm	≤ 60	≤ 20
15	-axial	µm	50-150	≤ 100
16	Maximum Recommended Input Speed	rpm	4,000	4,000
17	Operating Temperature Range:	°C (°F)	-30 to +65 (-22 to +150)	

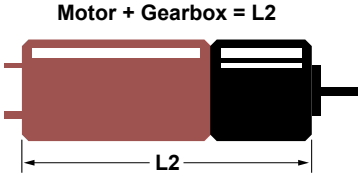

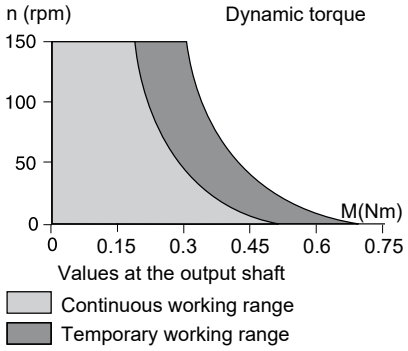

V092020 • © 2020 Portescap. Specifications subject to change without notice.

R32

Ø 32 mm • Planetary Gearbox • 4.5 Nm

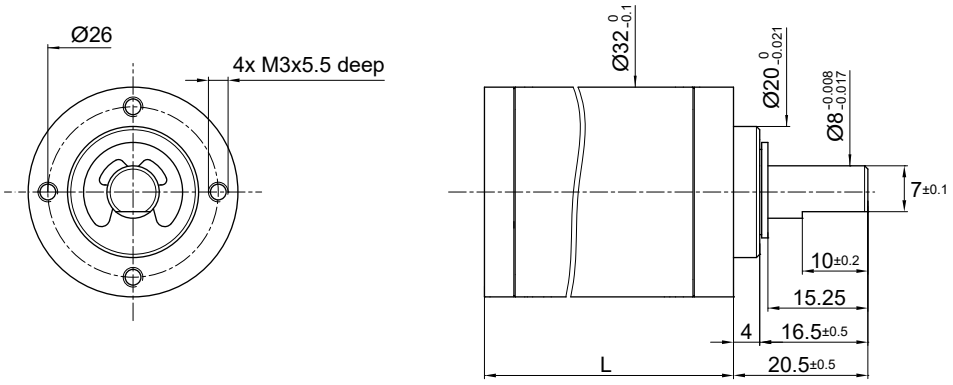

Dimensions in mm.

Ratio		5.75	17.4	24	33	72.3	99.8	138	190	301	416	574	792	1090
1	Number of Gear Stages	1	2	2	2	3	3	3	3	4	4	4	4	4
2	Direction of Rotation	=	=	=	=	=	=	=	=	=	=	=	=	=
3	Efficiency	0.8	0.75	0.75	0.75	0.65	0.65	0.65	0.65	0.55	0.55	0.55	0.55	0.55
4	L (mm)	32	38	38	38	44	44	44	44	50	50	50	50	50
5	Weight g	124	145	145	145	175	175	175	175	205	205	205	205	205
	Weight (oz)	(4.373)	(5.114)	(5.114)	(5.114)	(6.172)	(6.172)	(6.172)	(6.172)	(7.231)	(7.231)	(7.231)	(7.231)	(7.231)
6	**Available with Motor – L2 - Length with motor (mm)**													
	25GST82	75.5	81.5	81.5	81.5	87.5	87.5	87.5	87.5	93.5	93.5	93.5	93.5	93.5
	25GT82	85.45	91.45	91.45	91.45	97.45	97.45	97.45	97.45	103.45	103.45	103.45	103.45	103.45
	28L18/28	75.5	81.5	81.5	81.5	87.5	87.5	87.5	87.5	93.5	93.5	93.5	93.5	93.5
	28LT12	73.2	79.2	79.2	79.2	85.2	85.2	85.2	85.2	91.2	91.2	91.2	91.2	91.2
	28DT12	96.6	102.6	102.6	102.6	108.6	108.6	108.6	108.6	114.6	114.6	114.6	114.6	114.6
	30GT82	94.9	100.9	100.9	100.9	106.9	106.9	106.9	106.9	112.9	112.9	112.9	112.9	112.9
	35NT32/82	89.2	95.2	95.2	95.2	101.2	101.2	101.2	101.2	107.2	107.2	107.2	107.2	107.2
	35GLT2R82	99.2	105.2	105.2	105.2	111.2	111.2	111.2	111.2	117.2	117.2	117.2	117.2	117.2
	22ECT35	67	73	73	73	79	79	79	79	85	85	85	85	85
	22ECT48	80	86	86	86	92	92	92	92	98	98	98	98	98
	22ECT60	92	98	98	98	104	104	104	104	110	110	110	110	110
	22ECT82	114	120	120	120	126	126	126	126	132	132	132	132	132
	30ECT64	96	102	102	102	108	108	108	108	114	114	114	114	114
	30ECT90	122	128	128	128	134	134	134	134	140	140	140	140	140

Characteristics		Unit	R32 2R • 0 • ····
7	Shaft Bearings		Ball bearing
8	Maximum Static Torque	Nm (oz-in)	20 (2832)
9	Maximum Radial Force		
	@ 8mm from mounting face	N (lb)	180 (40.5)
10	Maximum Axial Force	N (lb)	150 (33.75)
11	Maximum Press Fit Force	N (lb)	500 (112.5)
12	Average Backlash @ no-load		1°
13	Average Backlash @ 0.3 Nm		2°
	Shaft Play:		
14	-radial	µm	≤ 10
15	-axial	µm	≤ 10
16	Maximum Recommended Input Speed	rpm	6,000
17	Operating Temperature Range:	°C (°F)	-30 to +85 (-22 to +185)

Motor + Gearbox = L2

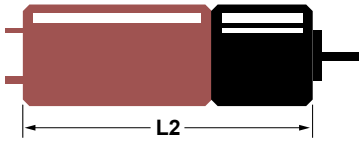

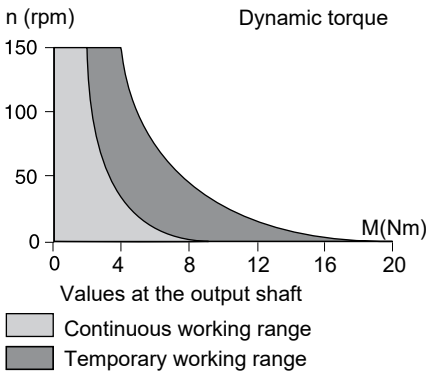

R40

Ø 40 mm • Planetary Gearbox • 10 Nm

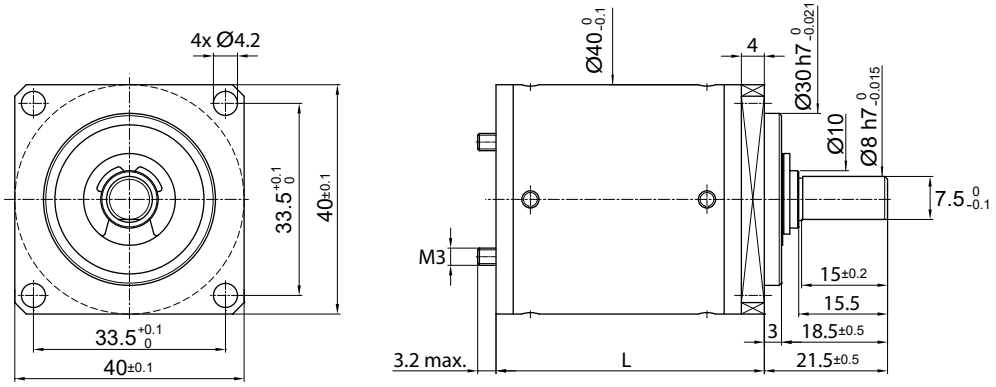

Dimensions in mm.

Ratio		3.56	5.6	15.2	24	54.2	85.3	134	193	303	478	753
1	Number of Gear Stages	1	1	2	2	3	3	3	4	4	4	4
2	Direction of Rotation	=	=	=	=	=	=	=	=	=	=	=
3	Efficiency	0.85	0.85	0.7	0.7	0.6	0.6	0.6	0.5	0.5	0.5	0.5
4	L (mm)	38.3	38.3	46.8	46.8	55.3	55.3	55.3	63.8	63.8	63.8	63.8
5	Weight g	245	245	285	285	340	340	340	400	400	400	400
	Weight (oz)	(8.642)	(8.642)	(10.052)	(10.052)	(11.993)	(11.993)	(11.993)	(14.109)	(14.109)	(14.109)	(14.109)
6	**Available with Motor – L2 - Length with motor (mm)**											
	25GT82	91.75	91.75	100.25	100.25	108.75	108.75	108.75	117.25	117.25	117.25	117.25
	28DT12	102.9	102.9	111.4	111.4	119.9	119.9	119.9	128.4	128.4	128.4	128.4
	30GT82	101.2	101.2	109.7	109.7	118.2	118.2	118.2	126.7	126.7	126.7	126.7
	35NT32/82	95.5	95.5	104	104	112.5	112.5	112.5	121	121	121	121
	35GLT82	105.5	105.5	114	114	122.5	122.5	122.5	131	131	131	131

Characteristics		Unit	R40 • 0 • ····
7	Shaft Bearings		Ball Bearing
8	Maximum Static Torque	Nm (oz-in)	40 (5700)
9	Maximum Radial Force		
	@ 8mm from mounting face	N (lb)	600 (135)
10	Maximum Axial Force	N (lb)	400 (90)
11	Maximum Press Fit Force	N (lb)	600 (135)
12	Average Backlash @ no-load		1°
13	Average Backlash @ 0.3 Nm		1.3°
	Shaft Play:		
14	-radial	µm	≤ 10
15	-axial	µm	≤ 10
16	Maximum Recommended Input Speed	rpm	6,000
17	Operating Temperature Range:	°C (°F)	-30 to +85 (-22 to +185)

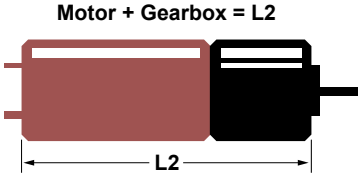

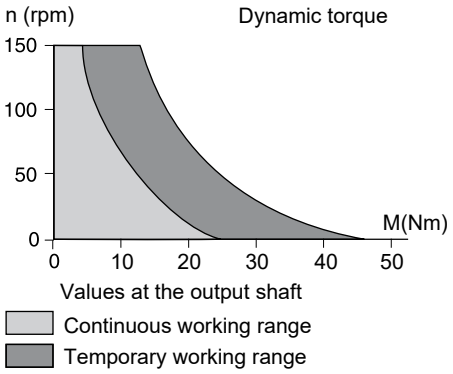

D12

Integrated Magnetic Encoder

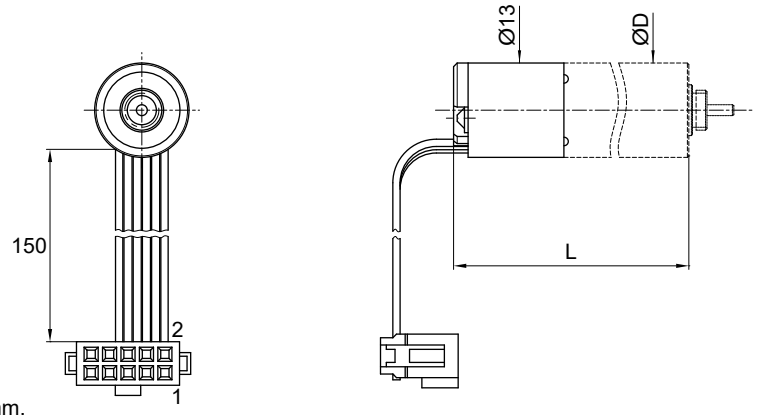

Dimensions in mm.

Encoder Type D Connections	
1	Motor +
2	Vcc
3	Channel A
4	Channel B
5	GND
6	Motor -
7	Strobe
8	NC
9	NC
10	NC

	Electrical Data		Characteristics @ 22° C	Unit
1	Number of Lines Available		12	LPR
2	Supply Voltage		5	Volt
3	Supply Current	Typical	4	mA
4	Rise Time		125	ns
5	Fall Time		50	ns
6	Output Signal		Two channels square wave	
7	Electrical Phase Shift		90 ± 40	degree
8	Signal Ratio		50 ± 25	%
9	Maximum Count Frequency		10	kHz
10	Operating Temperature Range:		-20 to +85 (-4 to +185)	°C (°F)
11	Code Wheel Moment of Inertia		0.1	10^{-7} x kgm^2
12	Weight		Varies by motor size. Contact us.	g (oz)

Available on Motor Types	13N88
Length with motor mm (in)	40.4 (1.59)

Typical Encoder Output Signal

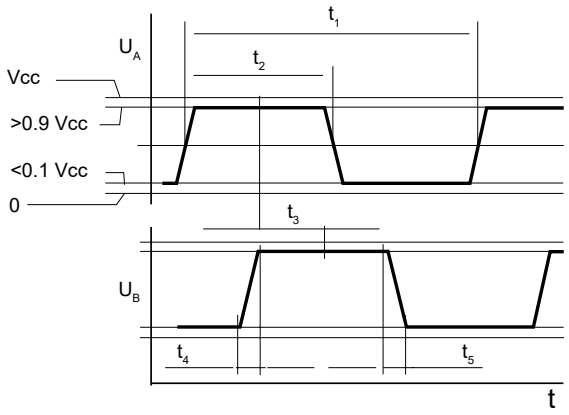

t_1	Period
t_2/t_1	Signal Ratio
t_3	Phase Shift
t_4	Rise Time
t_5	Fall Time

V092020 • © 2020 Portescap. Specifications subject to change without notice.

D16

Integrated Magnetic Encoder

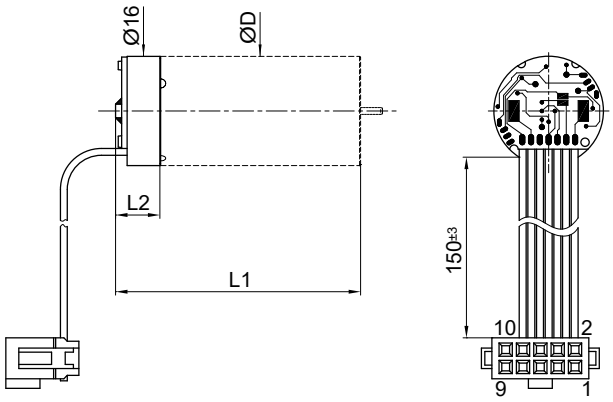

Encoder Type D Connections	
1	Motor +
2	Vcc
3	Channel A
4	Channel B
5	GND
6	Motor -
7	Strobe
8	NC
9	NC
10	NC

Dimensions in mm.

Electrical Data			Characteristics @ 22° C	Unit
1	Number of Lines Available		16	LPR
2	Supply Voltage		5	Volt
3	Supply Current	Typical	4	mA
4	Rise Time		125	ns
5	Fall Time		50	ns
6	Output Signal		Two channels square wave	
7	Electrical Phase Shift		90 ± 40	degree
8	Signal Ratio		50 ± 25	%
9	Maximum Count Frequency		10	kHz
10	Operating Temperature Range:		-20 to +85 (-4 to +185)	°C (°F)
11	Code Wheel Moment of Inertia		0.1	10^{-7} x kgm²
12	Weight		Varies by motor size. Contact us.	g (oz)

Available upon request	22N88	22V28
Length with motor mm (in)	37.8 (1.49)	40.1 (1.58)

Typical Encoder Output Signal

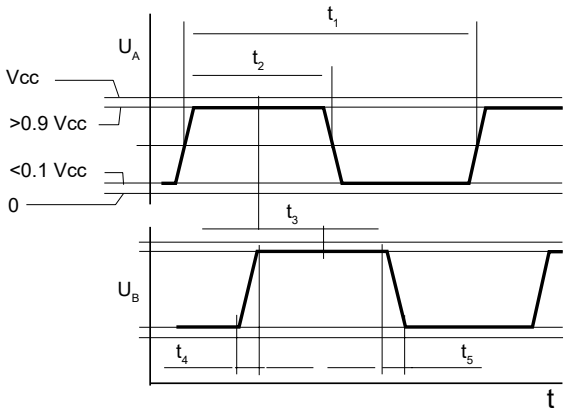

t_1	Period
t_2/t_1	Signal Ratio
t_3	Phase Shift
t_4	Rise Time
t_5	Fall Time

E9

3 Channel Optical Encoder

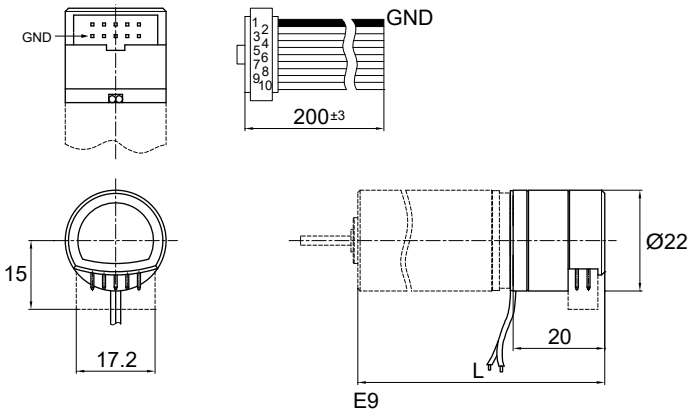

Dimensions in mm.

Electrical Data		Characteristics @ 22° C	Unit
1 Number of Lines Available		100, 144, 200, 256, 300, 360, 500 (1), 512 (1)	LPR
2 Supply Voltage		5 ± 10%	Volt
3 Supply Current	Typical	10	mA
	Maximum	20	mA
	Stand-by	50	µA
4 Output Signal		Compatible	CMOS
5 Electrical Phase Shift		90 ± 20	degree
6 Signal Ratio		50 ± 10	%
7 Maximum Count Frequency		200	kHz
8 Operating Temperature Range:		-40 to +85 (-40 to +185)	°C (°F)
9 Code Wheel Moment of Inertia		0.12	10^{-7} x kgm^2
10 Weight		6.2 (0.22)	g (oz)

Available on Motor Types	23GST	25GST	25GT	26N58
Length with motor mm (in)	69.2 (2.33)	63.7 (2.51)	73.65 (2.9)	62 (2.41)

Available on Motor Types	28L28	28LT12	28DT12	30GT	35NT	35GLT
Length with motor mm (in)	61.5 (2.42)	64.4(2.54)	85.8 (3.38)	88.3 (3.48)	82.6 (3.25)	92.6 (3.65)

(1) Ask for the 2R (ball bearing type) motor for use with the E9 in 500 or 512 line version

Features

- 2 channel quadrature ouput & index channel
- Stand-by function with latched state of channels (to de-activate the stand-by mode, connect pin 4 to the +5 v)
- Compact size
- Complementary outputs
- Up/down pulse signals (on request)
- Single 5 Vdc supply
- Integrated direction of rotation dectection
- CMOS capable – the input Stand-by must be connected to 0 Vdc or +5 Vdc

Typical Encoder Output Signal

Version 1

PIN Output
1 GND
2 Vcc
4 Standby[1]

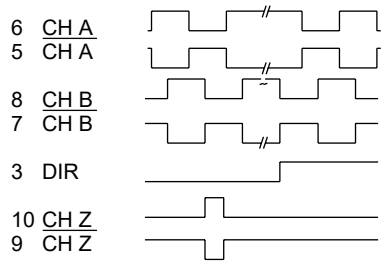

Version 2

PIN Output
1 GND
2 Vcc
4 Standby[1]

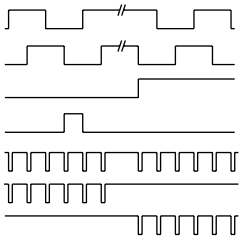

The input stand-by has to be connected

V092020 • © 2020 Portescap. Specifications subject to change without notice.

F16

Integrated Magnetic Encoder

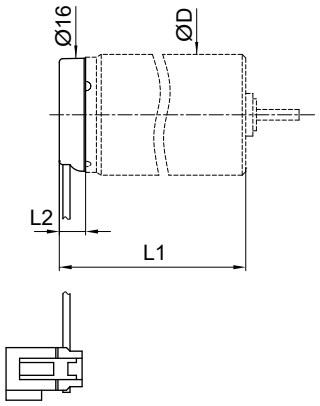

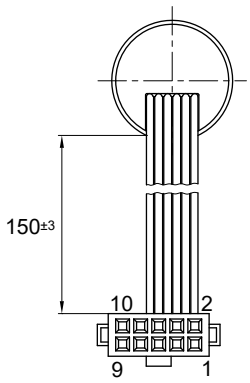

Encoder Type F Connections	
1	Motor +
2	Vcc
3	Channel A
4	Channel B
5	GND
6	Motor -
7	NC
8	NC
9	NC
10	NC

Dimensions in mm.

Electrical Data		Characteristics @ 22° C	Unit
1 Number of Lines Available		16	LPR
2 Supply Voltage		3.5 to 15	Volt
3 Supply Current	Typical	6	mA
4 Rise Time		5	µs
5 Fall Time		0.2	µs
6 Output Signal		Two channels square wave	
7 Electrical Phase Shift		90 ± 40	degree
8 Signal Ratio		50 ± 25	%
9 Maximum Count Frequency		15	kHz
10 Operating Temperature Range:		-20 to +85 (-4 to +185)	°C (°F)
11 Code Wheel Moment of Inertia		0.1	10^{-7} x kgm^2
12 Weight		Varies by motor size. Contact us.	g (oz)

Available on Motor Types	16C 18	17S78	17N78
Length with motor mm (in)	18.6 (0.73)	20.2 (0.795)	27.8 (1.09)

Typical Encoder Output Signal

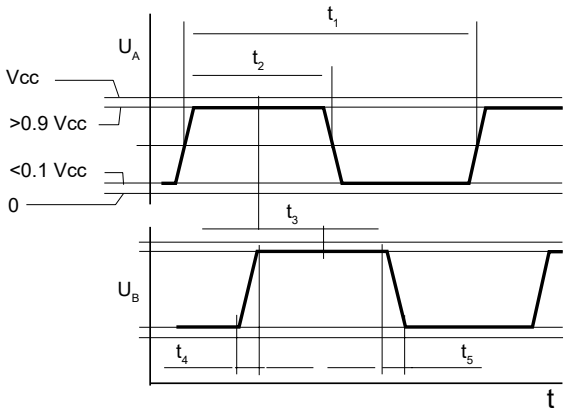

t_1	Period
t_2/t_1	Signal Ratio
t_3	Phase Shift
t_4	Rise Time
t_5	Fall Time

HEDS 5500/5540

3 Channel Optical Encoder

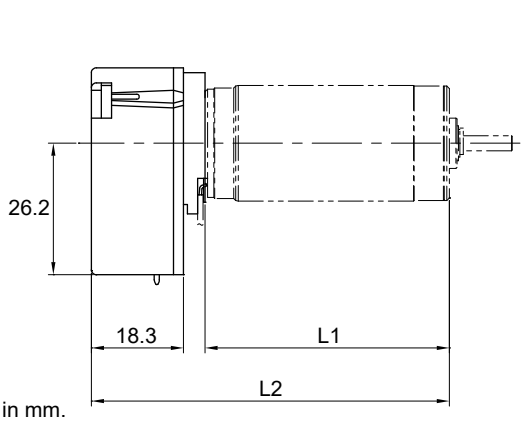

Encoder Connections	
1	Mass
2	NC
3	Channel A
4	Vcc
5	Channel B

Dimensions in mm.

Electrical Data		Characteristics @ 22° C	Unit
1 Number of Lines Available		96 to 1024	LPR
2 Supply Voltage		5 ± 10%	Volt
3 Supply Current	Typical/Maximum	17 - 57	mA
4 Output Signal		2 channels, square wave in quadrature 3 Channels (with index)	
5 Electrical Phase Shift		90 ± 10	degree
6 Maximum Count Frequency		100	kHz
7 Operating Temperature Range:		-40 to +100 (-40 to +212)	°C (°F)
8 Code Wheel Moment of Inertia		0.6 X 10-7	10^{-7} x kgm^2
9 Weight		17	g (oz)

Available on Motor Types*	22N98	23GST	26N48	28LT12	28DT12
Length with motor mm (in)	54.9 (2.16)	58.6 (2.31)	63 (2.48)	63.8 (2.51)	85.2 (3.35)

Available on Motor Types*	35NT
Length with motor mm (in)	83.45 (3.29)

*On request, encoder available on other motors. Encoder also available with line-driver.

Output Waveforms

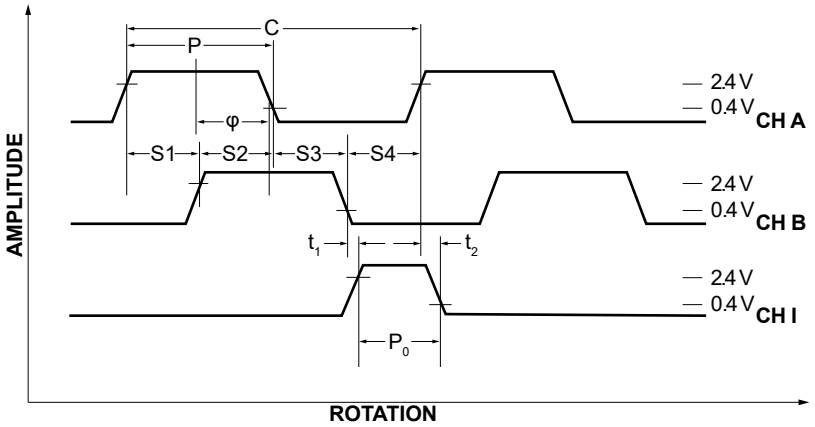

Phase (φ): This value is nominally 90°e for quadrature output.

Index Pulse Width (P_0): This value is nominally 90°e or 1/4 cycle.

State Width (S): Each state is nominally 90°e.

Pulse Width (P): This value is nominally 180°e or 1/2 cycle.

One Cycle (C): 360°e, 1 bar and window pair.

Channel I rising time (t_1): The value is nominally 100 ns.

Channel I falling time (t_2): The value is nominally 150 ns.

V092020 • © 2020 Portescap. Specifications subject to change without notice.

MR2

Integrated Magnetic Encoder

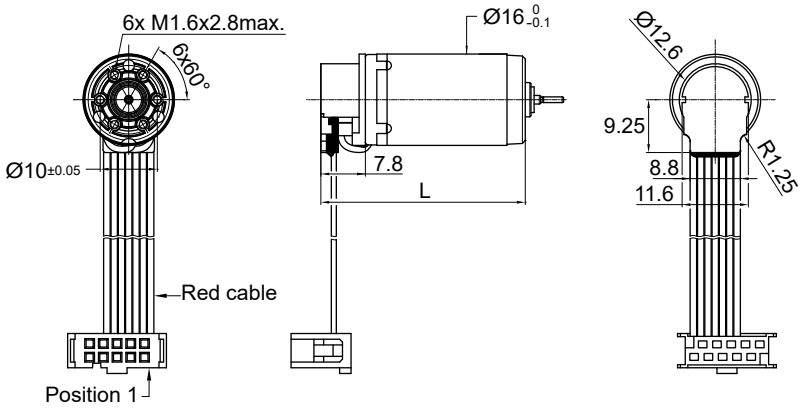

Dimensions in mm.

Electrical Data		Characteristics @ 22° C	Unit
1 Number of Lines Available		512, 500, 400, 256, 250, 200, 160, 128, 100, 80, 64, 50, 40, 32, 20, 16, 8, 4	LPR
2 Supply Voltage		5 ± 10%	Volt
3 Supply Current	Typical/Maximum	20/25	mA
4 Rise Time		60	ns
5 Fall Time		60	ns
6 Maximum Count Frequency		1.28	MHz
7 Electrical Phase Shift		90 ± 45	degree
8 Duty Cycle		50 ± 15	%
9 Maximum Speed @ 512		37,500	rpm
10 Operating Temperature Range:		-25 to +85 (-13 to +185)	°C (°F)
11 Weight		Varies by motor size. Contact us.	g (oz)

Available on Motor Types*	12G88	13N88	16G88	16N98	17S98	17N98
Length with motor mm (in)	33.8 (1.33)	34.35 (1.35)	35.8 (1.41)	33.2 (1.31)	23.9 (0.94)	31.1 (1.22)

Available on Motor Types*	22N98	25GST
Length with motor mm (in)	39.35 (1.55)	53.9 (2.12)

Output signals:

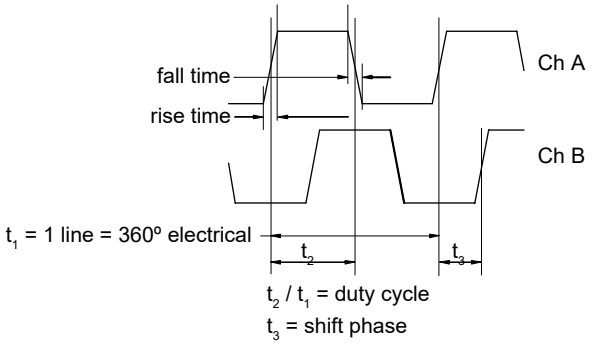

Encoder Connections	
1	Motor+
2	Vcc
3	Channel A
4	Channel B
5	GND
6	Motor -
7	Channel Z

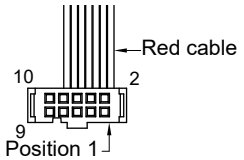

Connector 10 poles type Quickie II or equivalent DIN 41651 A (UL E68080)

M Sense B

Magnetic Encoder with RS422 Line Driver

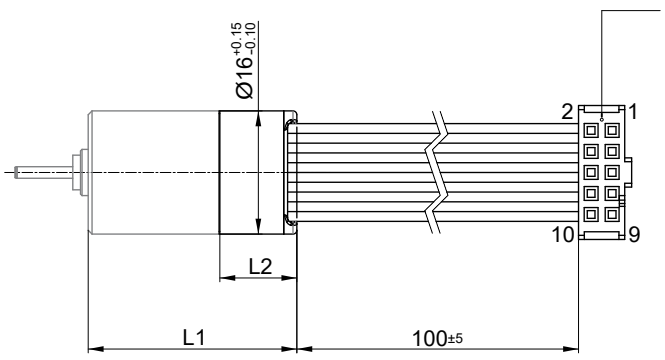

Encoder Connections	
1	Motor +
2	Vcc
3	GND
4	Motor -
5	Channel A/
6	Channel A
7	Channel B/
8	Channel B
9	Channel Z/
10	Channel Z

Dimensions in mm.

Electrical Data			Characteristics @ 22° C	Unit
1	Number of Lines Available		1024, 512, 256, 128..1	LPR
2	Supply Voltage	Min/Max	4.5 / 5.5	Volt
3	Supply Current	Typical/Max	16/23	mA
4	Rise/Fall time (CL=50pF)	Max	60	ns
5	Output Frequency		0.5	MHz
6	Electrical Phase Shift		90 ± 45 up to 256 LPR 90 ± 75 for 512 & 1024 LPR	degree
7	Duty Cycle		50 ± 15 up to 256 LPR 50 ± 25 for 512 & 1024 LPR	%
8	INL (Integral Non Linearity)	Max	1.5	degree
9	Maximum Speed @ 1024ppr	Max	30,000	rpm
10	Line Driver Parameters		4mA / 10MHz (default configuration)	
11	Cable Type		AWG28 Ribbon cable pitch 1.27mm	
12	Operating Temperature Range	Min/Max	-40 to +100 (-40 to +212)	°C
13	Weight		Varies by motor size. Contact us.	g (oz)

Available on Motor Types		16DCP 26P1/P2	16DCP 26G1/G2	16DCT 26P1/P2	16DCT 26G1/G2	16S78	16N98	17DCT 26P1/P2	17DCT 26G1/G2
L1	Length with motor mm (in)	36.1 (1.42)	36.6 (1.44)	36.1 (1.42)	36.6 (1.44)	27.1 (1.07)	36.4(1.43)	36.1 (1.42)	36.6 (1.44)
L2	Length with motor mm (in)	10 (0.40)	10 (0.40)	10 (0.40)	10 (0.40)	10 (0.39)	10 (0.40)	10 (0.40)	10 (0.40)

Available on Motor Types		17N78	22S48	22N98	22DCP	22DCT	24DCT	23GST	25GST
L1	Length with motor mm (in)	34.4 (1.35)	36.6 (1.44)	46.4 (1.83)	**	**	**	**	**
L2	Length with motor mm (in)	10 (0.40)	9.45 (0.38)	13.1 (0.52)	**	**	**	**	**

Available on Motor Types		30GT	35NT	35GLT	P110	16ECP36	16ECP52
L1	Length with motor mm (in)	**	**	**	32.4 (1.28)	47.4 (1.86)	63.4 (2.50)
L2	Length with motor mm (in)	**	**	**	13.6 (0.54)	11.4 (0.45)	11.4 (0.45)

**Available on request

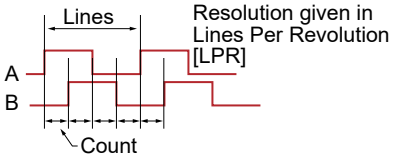

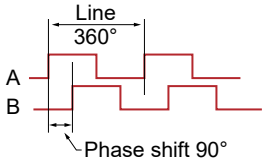

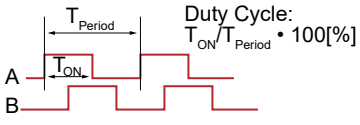

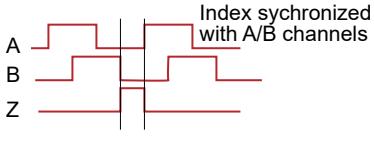

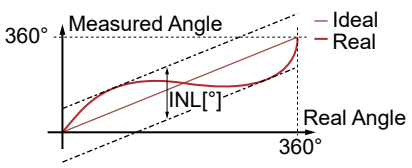

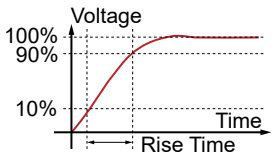

Encoder performance option available on request (contact us):

Optional Line driver type: 4mA-10MHz (default) / 50mA-10MHz / 50mA-300kHz / 20mA-3MHz. 4mA-10MHz is recommanded for use as single ended outputs. Other options are dedicated for use of differential outputs.

Other parameters can be customized: Index synchronization mode, minimal edge distance, direction of rotation, low current mode and other.

Engineer's Appendix

Examples of DC Coreless Motor Calculations

This section aims to provide all the information necessary to select a DC Coreless Motor and to calculate the values at the desired operating point.

Example: Direct drive without a gearhead attached to the motor.

For this application we are looking for a DC Coreless Motor for a continuous duty application. The application requirements are:

Available voltage:	10 Vdc		
Available current:	1 Amp		
Motor operating point:	2,000 rpm	[n]	desired motor speed
	6 mNm	[τ]	desired output shaft torque
	22° C	[T_{amb}]	ambient temperature
	Continuous operation		
Motor dimensions:	45 mm		maximum allowable length
	25 mm		maximum allowable diameter

The Portescap DC Coreless motor 22DCP can deliver 6.21 mNm of torque continuously, and is a good starting point for our calculation.

Let's examine the motor series 22DCP 32G1 213P.1, which has a nominal voltage of 9 Vdc. The characteristics we are most interested in are the torque constant (k) of 8.48 mNm/A, the terminal resistance (R) of 4.3 Ω and the no-load current (I_0) of 53 mA. For a load torque (τ) of 6 mNm the motor current is:

$$I = \tau / k + I_0 \qquad [A]$$

$$I = 6\ mNm / (8.48 \times 10^{-3}\ mN/A) + 53\ mA = 0.76\ A$$

The current value obtained is just below the maximum continuous current of the selected product. Now let's verify that to meet this working point, we have enough supply voltage (U).

$$U = R \times I + k \times \varpi \quad [Vdc]$$

$$\varpi = 2\pi/60 \times n = 2\pi/60 \times 2{,}000\ rpm = 209.44\ rad/s \qquad [rad/s]$$

$$U = 4.3\ \Omega \times .76\ A + (8.48 \times 10^{-3}\ Nm/A) \times 209.44\ rad/s = 5.0\ Vdc$$

With 10V supply voltage available and only 5V required, the motor will be able to meet the required working point. We note that the current of 0.76 A is quite close to the rated continuous current of 0.77 A. This means the coil temperature reached at this current is likely to be very close the motor specified maximum coil temperature of 100°C. The below chapter explores thermal considerations applied to this case.

V092020 • © 2020 Portescap. Specifications subject to change without notice.

Thermal considerations while selecting a motor:

When torque is applied to a motor, joule losses are created ($P_{Joule} = R \times I^2$) and the rotor temperature increases. The motor dissipates the heat generated at two levels:

1. From the coil to the motor body ($R_{th\ rotor-body}$)
2. From the motor body to the ambient environment ($R_{th\ body-ambient}$)

The ability for a motor to dissipate heat is determined by these thermal resistances. Moreover, the coil resistance value increases with temperature. Therefore PJoule increases until it reaches a steady state value. In this exercise we would like to check whether at a given continuous operating point the coil temperature stays below the maximum rated coil temperature.

The 22DCP 32G1 213P.1 requires 0.76 A and 5.0 V at a working point 6.45 mNm and 2,000 RPM. The given catalogue parameters are:

Maximum rated coil temperature:	100	[°C]
Thermal resistance $R_{th\ rotor-body}$:	6	[°C/W]
Thermal resistance $R_{th\ body-ambient}$:	22	[°C/W]
Terminal resistance R_0*:	4.3	[Ω]
Thermal coefficient of resistance for Copper α:	0.0039	[$°C^{-1}$]

*The terminal resistance in the catalog is always given at room temperature (22 °C).

The resistance increase with temperature is given by the following equation:

$$R_{T\ Final} = R_0 \times (1 + \alpha \times (T_{Final} - 22\ °C))$$

According to the Thermal Law:

$$\Delta T = P_{dissipated} \times R_{th}$$

In our case, we consider the following thermal law between the coil and the ambient environment. ΔT [°C] is the temperature difference between the coil and the ambient temperature $T_{coil} - T_{amb}$.

$$P_{dissipated} = P_{Joule} = R \times I^2 = R_0 \times (1 + \alpha \times (T_{coil} - 22\ °C)) \times I^2 \quad [W]$$

$$R_{th} = R_{th\ rotor-body} + R_{th\ body-ambient} = 28\ °C/W$$ (total thermal resistance between the coil and ambient)

Thus:

$$T_{coil} - T_{amb} = R_{th} \times R_0 \times (1 + \alpha \times (T_{coil} - 22\ °C)) \times I^2 \quad [°C]$$

Finally, isolating T_{coil} gives:

$$\boldsymbol{T_{coil}} = \frac{T_{amb} + R_{th} \times R_0 \times (1 - \alpha \times 22°\ C) \times I^2}{1 - R_0 \times I^2 \times R_{th} \times \alpha} = \frac{22°\ C + 28°\ C/W \times 4.3\Omega \times \left(1 - 0.00339°\ C^{-1} \times 22°\ C\right) \times (0.76\ A)^2}{1 - 4.3\Omega \times (0.76\ A)^2 \times 28°\ C/W \times 0.00339°\ C^{-1}} = 118°\ C$$

Engineer's Appendix

At steady state, the final coil temperature calculated is 118°C which is above the 100°C limit. In theory this motor coil insulation would burn and create a short-circuit in the coil. However, the thermal resistance Rth body– ambient is usually overestimated. It is measured when the motor is placed in air with no contact with another part. In reality, the motor is always fixed in the application (fixed by the front flange, clamped on the outside diameter, etc.). These fixations usually act as heat sinks and allow the motor to dissipate more heat. Therefore a real value for Rth body–ambient in the application is usually closer to half of the value given in the datasheet. Doing the math with Rth body– ambient = 11°C/W (Rth = 17 °C/W) will give you a final coil temperature of 73°C, providing enough security compared to the 100°C limit.

Let's now take into account the impact of the 73° C coil temperature :

$$R_{T\,Final} = R_0 \times (1 + \alpha \times (T_{Final} - 22\ °C)) = 4.3\ \Omega \times (1 + 0.0039\ °C \times (73°\ C - 22°\ C)) = 5.14\ \Omega$$

In our case, the resistance has increased and therefore the joule losses have also increased. To keep the same mechanical power output, we need to provide more electrical input:

$$U = R_{T\,Final} \times I + k \times \varpi = 5.14\ \Omega \times 0.76\ A + (8.48 \times 10^{-3}\ Nm/A) \times 209.44\ rad/s = 5.7\ V$$

Thus, to achieve the requested speed at 73° C coil temperature, the voltage has to be increased at 5.7 V.

$$P_{mech} = 6\ mNm \times 2{,}000\ rpm \times 2\pi/60\ rad\text{-}s^{-1}/rpm = 1.25\ W$$

$$P_{elec} = 5.7\ V \times 0.76\ A = 4.33\ W$$

$$P_{joule} = 5.14\ \Omega \times (0.76\ A)^2 = 2.97\ W$$

$$Efficiency = P_{mech} / P_{elec} = 29\%$$

Note: The above model is only valid for continuous operation. For intermittent duty, a time step model is necessary to estimate the final temperatures.

In conclusion, the 22DCP will be an appropriate choice if the mountings will help dissipate heat. But to achieve better efficiency, another stronger motor can be selected. The below example takes efficiency into consideration for the same working point.

Selecting a DC Brush Motor for better efficiency and temperature regulation:

Let's consider the fundamental equation of DC motors:

$$U = R \times I + k \times \varpi$$

Multiplying both sides of the equation by the current:

$$U \times I = R \times I^2 + k \times I \times \varpi$$

From $\tau = k \times I$ we know that $I = \tau/k$. Substituting into the previous equation and simplifying gives:

$$U \times I = R/k^2 \times \tau^2 + \tau \times \varpi$$

By examining this equation we can identify the key parameters.

$U \times I = P_{elec}$ is the electrical power supplied

$\tau \times \varpi = P_{mech}$ is the mechanical power converted by the motor

$R/k^2 \times \tau^2$ = joule losses

V092020 • © 2020 Portescap. Specifications subject to change without notice.

Therefore the motor regulation parameter R/k^2 is directly related to the motor's capability of converting electrical power to mechanical power. A lower value of R/k^2 means better heat conversion. R/k^2 values are usually in the same range for a motor family and are very good indicators of motor performance across different motor types.
For example:

22DCP types offer R/k^2 values around 60×10^3/Nms.

22DCT types offer R/k^2 values around 11×10^3/Nms.

For the same package size (22 mm diameter, 32 mm length) and the same mechanical output power, the Athlonix 22DCT will have five times less joules losses and therefore better efficiency.

To take into consideration thermal properties of the motor, we can compare the values for $R/k^2 \times R_{th}$ which reflect the ability of a motor to convert electrical power to mechanical power and dissipate joule losses for a given job:

	R/k^2 [10^3/Nms]	**$R_{th} = R_{th\ rotor\ -\ body} + R_{th\ body\ -\ ambient}$**	**$R/k^2 \times R_{th}$ [°C x10^3/(Nm)^2]**
22DCP 32G1 213P	60	28	1680
22DCT 32G1 226E	11	28	308

The above table predicts best thermal behavior under load conditions for 22DCT motor. If we do the math, we will have the following parameters and results:

22DCT 32G1 226E

$k = 12.12$ mNm/A
$I = \tau/k + I_0 = 0.53$ A
$R_0 = 1.7\ \Omega$
$R_{th} = 6$ °C/W + (22 °C/W)/2 = 17 °C/W

Using the method of calculation as the previous example:

$T_{coil} = 30$ °C
$R_{30\ °C} = 1.75\ \Omega$
$U_{required} = 3.47$ V

$P_{elec} = 3.47\ V \times 0.53\ A = 1.84$ W
$P_{mech} = 6 \times 10^{-3}$ Nm × 2,000 rpm × 2π/60 rad-s^{-1}/rpm = 1.26W
$P_{Joule} = R_{30\ °C} \times I^2 = 1.75\ \Omega \times 0.53\ A^2 = 0.49$ W
Efficiency = $P_{mech} / P_{elec} = 1.26\ W / 1.84\ W = 68\%$.

Selecting a motor with better R/k^2 enabled us to more than double the efficiency. Thermal considerations are important for an optimal motor selection and to ensure best performance.

During the whole exercise we could identify two solutions that meet the requirements. If efficiency was a critical parameter in the application (battery operation for example), the 22DCT is a more suitable option.

Engineer's Appendix

Examples of DC Coreless Gearmotor Calculations

Example: Direct drive with a gearhead attached to the motor.

For this application we are looking for a DC Coreless Motor & Gearhead for a continuous duty application. The application requirements are:

Available voltage:	15 Vdc		
Available current:	1.5 Amp		
Motor operating point:	30 rpm	[n]	desired motor speed
	500 mNm	[τ]	desired output shaft torque
	22°C	[T_{amb}]	ambient temperature
	Continuous operation		
Motor dimensions:	80 mm	maximum allowable length	
	25 mm	maximum allowable diameter	

The specification page for the R22 gearhead shows a maximum continuous torque of 600 mNm, so the required 500 mNm can be handled by this planetary gearhead. When choosing the reduction ratio, we should keep in mind that the recommended maximum input speed of the R22 gearhead is 5,000 rpm. We should keep the input speed below this value to assure low wear and low audible noise.

$$i = n_{max} / n_{load}$$

$$i = 5{,}000 \text{ rpm} / 30 \text{ rpm} = 166.7$$

The catalog indicates that the closest ratio to the desired value calculated above is 159:1. The efficiency for this ratio is $\eta = 0.6$ (or 60%). We may now calculate the motor speed (n_m) and the reflected torque (τ_m) on the motor shaft.

$$\tau_m = \tau / (i \times \eta) \text{ [mNm]}$$

$$\tau_m = 500 \text{ mNm} / (159 \times 0.6) = 5.24 \text{ mNm}$$

$$n_m = n_{load} \times i = 30 \text{ rpm} \times 159 = 4{,}770 \text{ rpm}$$

The motor data sheet shows the 22DCP family of motors can deliver a torque up to 6.21 mNm continuously and will be our candidate. The 22DCP is available as a standard combination with the planetary gearhead R22. Based on the available voltage let's consider the 211P winding (12 V measuring voltage) and calculate the motor current and voltage the same way as in the previous example.

The motor is required to be driven at a speed of 4,770 rpm under a load of 5.24 mNm. The ambient temperature (T_{amb}) is 22 °C and the available voltage in the application is 15 Vdc. The characteristics we are most interested in are the torque constant (k) of 11.63 mNm/A, and the terminal resistance of 7.8 Ω. Neglecting the no-load current (I_o), for a torque load of 5.24 mNm the motor current is: $I = \tau / k$ = 5.24 mNm / 11.63 mNm/A = 0.45 A

Now we can calculate the drive voltage required to run the motor at 22°C, for a desired speed of 4,770 rpm with a load torque of 5.24 mNm:

$$U = R \times I + k \times \varpi \text{ [Vdc]}$$

$$\varpi = 2\pi/60 \times n = 2\pi/60 \text{ rad/rpm-s} \times 4{,}770 \text{ rpm} = 499.51 \text{ rad/s}$$

$$U = (7.8\ \Omega \times 0.45 \text{ A}) + (11.63 \times 10^{-3} \text{ Nm/A} \times 499.51 \text{ rad/s}) = 9.3 \text{ Vdc}$$

We note the current of the motor under load is 0.45 A, which is under the rated continuous current of 0.57 A. We therefore can safely assume that the final rotor temperature (T_f) will stay below the maximum rated coil temperature of 100 °C. We can also be sure that the voltage will remain within the 15 Vdc due to raise in coil resistance. The final coil temperature would be 76 °C and the required voltage due to higher coil resistance would be 10 Vdc. Both are well within the limits and our assumptions are justified.

The problem is now solved. The gearmotor 22DCP 32P2 211P.5 R22 0 159 would be a good choice for the application. If the application requires particularly long motor life or if this were a battery application, the 22DCT could also be considered to increase efficiency and extend battery life.

V092020 • © 2020 Portescap. Specifications subject to change without notice.

Examples of DC Motor Calculations

Example: Positioning with a DC Coreless Motor.

In this application we are looking for a DC Coreless Motor to move an inertial load (J_{load}) of 40 × 10^{-7} kgm^2 by an angle of 1 rad in 20 msec.

The application requirements are:

Available voltage:	48 Vdc		
Available current:	4 Amp		
Motor operating point:	1 rad	[Ø]	desired motor movement
	30 × 10^{-7} kgm^2	[J_{load}]	motor load inertia on output shaft
	20 msec	[Δt]	desired move time
	22° C	[T_{amb}]	ambient temperature
Motor dimensions:	68 mm	maximum allowable length	
	35 mm	maximum allowable diameter	

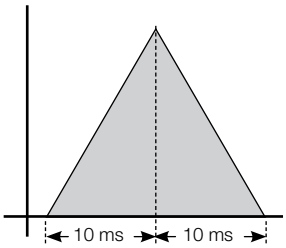

Speed Profile

Friction is negligible. With this incremental application we consider a duty cycle of 100% and a triangular speed profile.

The motor must rotate 0.5 rad (Ø/2) in 10 msec (Δt/2) while accelerating, then another 0.5 rad (also Ø/2) in 10 msec (also Δt/2) while decelerating. First let us calculate the angular acceleration α.

$$\alpha = (2 \times Ø/2)/(\Delta t/2)^2 \qquad [rad/s^2]$$

$$\alpha = 2 \times .5 \text{ rad}/ (.01 \text{ s})^2 = 10{,}000 \text{ rad/s}^2$$

The torque necessary to accelerate the load is:

$$\tau_{load} = J_{load} \times \alpha \qquad [mNm]$$

$$\tau_{load} = 30 \times 10^{-7} \text{ kgm}^2 \times 10{,}000 \text{ rad/s}^2 = .030 \text{ Nm} = 30 \text{ mNm}$$

When selecting a motor for incremental motion, it is best if the inertia of the rotor is equal to the inertia of the load. If the rotor inertia is much larger, then a large portion of the mechanical power is used just to move the rotor. The rotor inertia should also not be less than half the load inertia. If it is, then a gearbox should be used to reduce the load inertia felt by the motor. This process is referred to as matching inertias. We will thus select a motor that has a rotor inertia close to 40 × 10^{-7} kgm^2.

According to the motor specification page, the 30GT2R82-234P.4 has a rotor inertia of 33 × 10^{-7} kgm^2 and has a torque constant of 20.1 mNm/A. It can deliver enough continuous torque (87 mNm) to handle the combined load calculated below.

$$\tau_{rotor+road} = (30 \times 10^{-7} \text{ kgm}^2 + 33 \times 10^{-7} \text{ kgm}^2) \times 10{,}000 \text{ rad/s}^2 = .063 \text{ Nm} = 63 \text{ mNm}$$

$$I = \tau / k + I_0 = 63 \text{ mNm} / (20.1 \text{ mNm/A}) + 180 \text{ mA} = 3.31 \text{ A}$$

The coil resistance (at 22° C) is 0.50 Ω, and the thermal resistance is 4.5° C/W + 9° C/W / 2 = 9° C/W. By using the equation from the first example we find:

$$T_F = 83° \text{ C} \qquad R_{83° C} = .62 \ \Omega$$

Since we are using a triangular speed profile, we must determine the maximum speed of the motor during the move and then calculate the required voltage at that speed for the above coil resistance at operating temperature. This maximum speed will occur at the peak of the triangle (after 10 msec).

$$\varpi_{max} = \alpha \times \Delta t \qquad [rad/s]$$

$$\varpi_{max} = 10{,}000 \text{ rad/s}^2 \times 0.010 \text{ sec} = 100 \text{ rad/s}$$

$$U = R \times I + K \times \varpi = 0.62 \ \Omega \times 3.31 \text{ A} + (20.1 \times 10^{-3} \text{ Nm/A}) \times 100 \text{ rad/s} = 4.06 \text{ Vdc}$$

The problem is now solved. Since the maximum permissible coil temperature of the 35NT is 155° C, and the available voltage in the application is 48 V, this motor is perfectly capable of performing the required movement.

It is interesting to note here that, had we chosen the larger motor 35NT2R82, the coil temperature would be calculated at over 300° C! Even though the motor is capable of providing more torque, the higher rotor inertia requires it to supply much more power just to move its rotor at the desired speed. This demonstrates the importance of inertia matching.

Engineer's Appendix

Examples of BLDC Slotless Motor calculations

This chapter aims to provide all the information necessary to select a BLDC Slotless motor and to calculate the values at the desired operating point. The following examples are for motor applications running in continuous operation.

1) Example: Brushless application requirements

For this application we are looking for a BLDC motor with high speed capabilities in a continuous duty operation. The motor will be controlled by an amplifier for a motor with Hall Effect sensors.

Available voltage:	30 Vdc		
Available current:	3 Amps		
Motor operating point:	12,000 rpm	[ω]	desired motor speed
	20 mNm	[τ]	motor shaft output torque
	22° C	[T_{amb}]	ambient temperature
	Continuous operation		
Motor physical dimensions:	60 mm		maximum allowable length
	25 mm		maximum allowable diameter

Using the speed-torque curve and maximum allowable operating specifications from the data sheet, it is possible to select the correct motor solution. Here we find the BLDC motor 22ECP45 capable of operating at the desired working point.

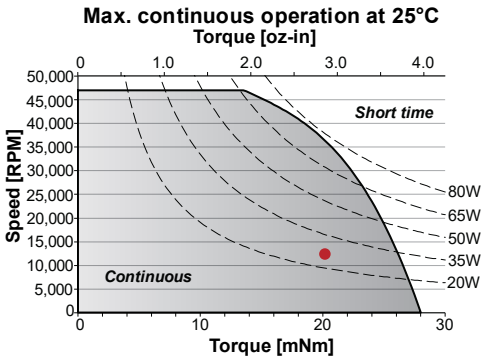

The motor 22ECP45 is available in 2 different 24 Vdc windings. Windings offer same overall performance (maximum torque, merit factor, etc...) but help using different voltage and current configurations. Since the desired motor speed is 12,000 rpm we will investigate the "82" winding with a no load speed of 15,700 rpm. The torque constant is 14.6 mNm/A and the resistance is 1.59 Ω.

Calculating for the motor current we find:

$$I = \tau / k + I_0 = 20\ \text{mNm} / 14.6\ \text{mNm/A} + 60\ \text{mA} = 1.43\ \text{A}$$

The supply current of the system is 3 Amps and therefore current draw is not an issue. Calculating the voltage required to run the motor at 12,000 rpm:

$$U = R \times I + k \times \omega$$

$$\omega = 2\pi/60 \times n = 2\pi/60\ \text{rad/rpm-s} \times 12{,}000\ \text{rpm} = 1257\ \text{rad/s}$$

$$U = 1.59\ \Omega \times 1.43\ \text{A} + (14.6 \times 10^{-3}\ \text{Nm/A}) \times 1257\ \text{rad/s} = 20.6\ \text{Vdc}$$

The problem is now solved. Since the voltage required is less than the available voltage, it is possible to reach the operating point with the BLDC Slotless motor 22ECP45 8B 82 .01. The 22ECP45 with coil "154", despite being able to work at the same working point, would have required higher voltage but lower current.

V092020 • © 2020 Portescap. Specifications subject to change without notice.

2) Example: Brushless motor with a Gearhead

For this application we want to drive a load at an extremely low constant speed. The customer needs a combination of a Brushless DC motor with a gearhead.

Available voltage:	20 Vdc		
Available current:	2 Amps		
Gearmotor operating point:	60 rpm	[ω]	desired gearmotor speed
	150 mNm	[τ]	gearmotor shaft output torque
	22° C	[T_{amb}]	ambient temperature
	Continuous operation		
Motor physical dimensions:	120 mm	maximum allowable length	
	20 mm	maximum allowable diameter	

Before selecting a motor we must first determine which gearhead is suitable for the application. The important parameters are the specifications relating to the operating point at the shaft of the gearhead. Once an appropriate gearhead has been determined, the working point at the motor shaft can be calculated. From here the motor type can be defined using the same procedure as in the previous example for motor only.

We start the elimination process by comparing the desired gearhead output torque with the data of the various gearheads in continuous operation as listed in the catalog specification pages. We find the R16 planetary gearhead (16 mm diameter) capable of operating at the desired working point.

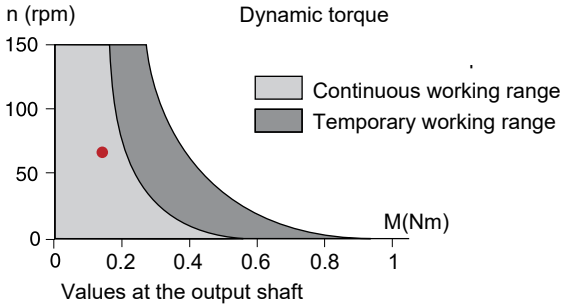

For continuous operation, one of the most important gearhead parameters to be considered is the maximum recommended input speed into the gearhead ($n_{max\ input\text{-}gearhead}$). This specification allows us to calculate the maximum reduction ratio (i_{max}) to use for the application.

$$i_{max} = n_{max\ input\ -\ gearhead} / n_{output\ -\ gearhead} = 7{,}500\ rpm / 60\ rpm = 125$$

The gearhead can be chosen by selecting the largest available ratio that is below the above result. By reviewing the catalog we choose the 121:1 ratio R16 gearhead.

Motor speed at the shaft:

$$n_{motor} = i \times n_{output\ -\ gearhead} = 121 \times 60\ rpm = 7{,}260\ rpm$$

Motor torque at the shaft:

$\eta = 0.65$ (gearhead efficiency)

$$\tau_{motor} = \tau_{gearhead} / i \times \eta = 150\ mNm/(121 \times .65) = 1.91\ mNm$$

Engineer's Appendix

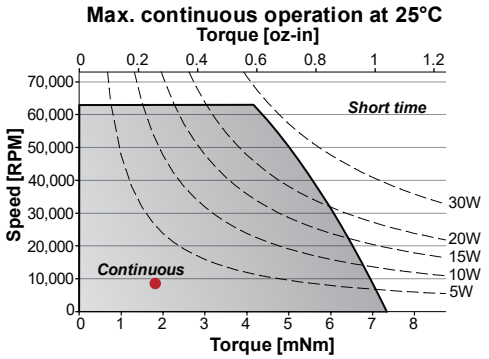

Since the gearhead has a diameter of 16 mm we will be looking at 16 mm Brushless DC motors. Based on the load torque (τ_m) the motor will be required to turn, we select the 16ECP36 8B (the 8B refers to the option for Hall Effect Sensors).

The 16ECP36 8B is available in 4 different windings. Windings offer same overall performance (maximum torque, merit factor, etc...) but help using different voltage and current configurations. Since the desired motor speed is 7,260 rpm we will investigate the 16ECP36 8 B 245 with a no load speed of 12,420 rpm under a 24V supply voltage. The torque constant is 17.6 mNm/A and the line to line resistance is 21.1 Ω.

Calculating for the motor current we find:

$$I = \tau / k + I_0 = 1.91 \text{ mNm} / (17.6 \text{ mNm/A}) + 35 \text{ mA} = 0.14 \text{ A}$$

There are no issues with the current because the system is able to supply 2 amps and the maximum recommended continuous current is 0.4 Amps. The voltage required to run the motor at 7,260 rpm is determined by the following formula:

$$U = R \times I + k \times \omega$$

$$\omega = 2\pi/60 \times n = 2\pi/60 \text{ rad/rpm-s} \times 7{,}260 \text{ rpm} = 760.3 \text{ rad/s}$$

$$U = 21.1\ \Omega \times 0.14 \text{ A} + (17.6 \times 10^{-3} \text{ Nm/A}) \times 760.3 \text{ rad/s} = 16.33 \text{ Vdc}$$

The problem is now solved. The voltage required is less than the available voltage, therefore the motor 16ECP36 8B 245 with the planetary gearhead R16 0 121 can achieve the desired working point. If the application were very noise sensitive, a lower ratio would help reducing the gearbox input speed which is the main contributor of noise.

V092020 • © 2020 Portescap. Specifications subject to change without notice.

Examples of DMM Stepper Motor Calculations

Example: Positioning with a DMM Stepper Motor

For this application we are looking for a Stepper motor for an intermittent duty application. The application requirements are:

Available voltage:	45 Vdc		
Available current:	2 Amp		
Motor operating point:	0.5 rad	[θ]	desired motor position
	20×10^{-7} kgm^2	[J_{load}]	motor load inertia on the output shaft
	20 msec	[Δt]	desired move time
	40 °C	[T_{amb}]	operating temperature Intermittent operation
Motor dimensions:	68 mm		maximum allowable length
	35 mm		maximum allowable diameter

L/R Driver - No Gearbox - No Ramping Acceleration

Let us first see whether the move can be accomplished with a simple L/R drive not featuring ramping acceleration. In this case we need to check whether the motor can start at the required speed and load inertia.

We consider the speed profile to be rectangular with constant speed:

$$\text{Speed} = \omega = 0.5 \text{ rad} / 0.02 \text{ sec} = 25 \text{ rad/s}$$

$$n_{motor} = 25 \text{ rad/s} \times 60/2\pi \text{ rpm-s/rad} = 239 \text{ rpm}$$

The figure shows the pull-in and pull-out torque curves for the P310 motor. We will use a simple L/R drive which provides 7 Vdc in full step mode. Since no ramping is provided (constant speed), the pull-in torque curve shows a maximum starting speed of 800 rpm when accelerating an inertia equal to the motor inertia and without any additional torque (friction torque is zero for example). With a safety factor of 75% the maximum starting frequency is f_0 = 600 steps/s. The inertia of the P310 is 0.86 kg-m^2 but we need to accelerate 20 kg-m^2. Therefore the maximum starting frequency f1 to move this load is:

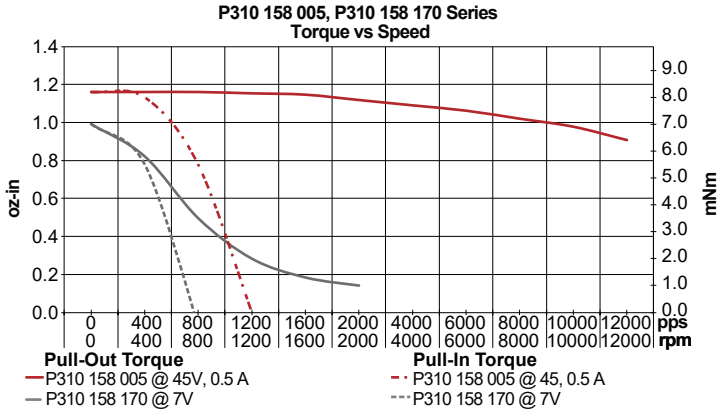

$$f_1 = f_0 \times \sqrt{((2 \times J_m)/(J_m + J_{load}))}$$

$$f_1 = 600 \text{ steps/s} \times \sqrt{((2 \times 0.86 \text{ kg-m2}) / (20 \text{ kg-m2} + 0.86 \text{ kg-m2}))} = 172 \text{ rpm}$$

As a result, P310 with a simple L/R drive would not be able to suit the requirements.

Engineer's Appendix

The stepper motor P430 makes 100 steps/rev. To move the load 0.50 rad with a stepper motor that has a 3.6° step angle, it will take the motor 8 steps to make this move.

0.50 rad = 28.65°

28.65°/3.6° = 7.96 ➔ 8 steps of the motor needed

The starting frequency equivalent to 25 rad/s is :

f = (25 rad/s / 2π rad/rev) x 100 steps/rev = 398 steps/s

With 36 Vdc available in the L/R drive and 47 Ω resistors in series, the P430 can start at up to 1,700 steps/s while moving an inertial load equal to its own rotor inertia without any additional torque required. With 75% safety margin:

f_0 = 1,700 x 0.75 =1,275 steps/s

With an inertial load of 20 × 10^{-7} kg-m^2 this pull-in frequency becomes:

f1 = 1,275 steps/s × √(2 x 3 kgm^2/(20 kg-m^2+ 3 kgm^2) = 651 steps/s

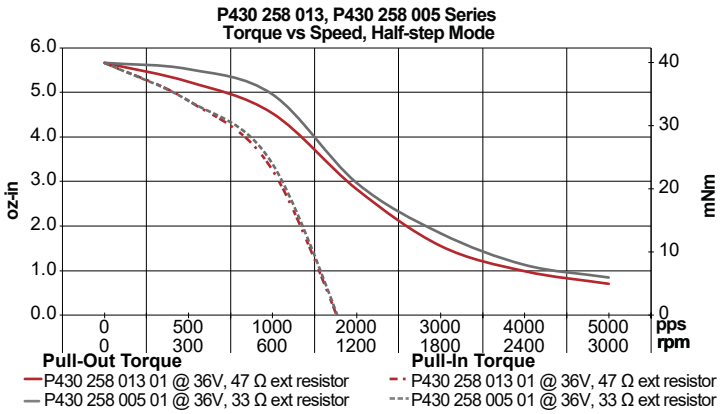

The problem is now solved. The working point of 398 steps/s is well below the pull-in torque curve of the P430, and no ramping is necessary to perform the desired operation.

The move could be made in an even shorter time if we use a starting frequency closer to the maximum allowed:

f = 600 steps/s
ω = (600 steps/s / 100 steps/rev) x 2π rad/rev = 38 rad/s
Δt = 0.5 rad / 38 rad/s = 13 msec

V092020 • © 2020 Portescap. Specifications subject to change without notice.

Chopper Driver – No Gearbox – With Ramping Acceleration

The load inertia of 20×10^{-7} kg-m^2 has to be moved by an angle of 0.50 rad (θ) in 20 msec using an acceleration ramp. We will use a triangular speed profile with an acceleration time of 10 msec for a shaft movement of .25 rad. The speed required is calculated as follows.

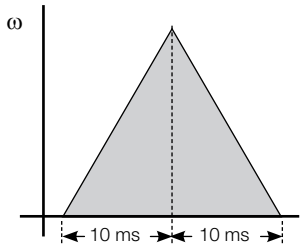

Speed Profile

$$\text{Acceleration} = \alpha = 2 \times (\theta/\Delta t^2) = 2 \times .25 \text{ rad} /(0.01 \text{ sec})^2 = 5{,}000 \text{ rad/s}^2$$

$$\text{Speed} = \omega = (5{,}000 \text{ rad/s}^2) \times 0.01 \text{ sec} = 50 \text{ rad/s}$$

$$n_{motor} = 50 \text{ rad/s} \times 60/2\pi \text{ rpm-s/rad} = 477.5 \text{ rpm}$$

The torque necessary to accelerate the load is:

$$\tau_{load} = J_{load} \times \alpha \qquad [\text{Nm}]$$

$$\tau_{load} = 20 \times 10^{-7} \text{ kg-m}^2 \times 5{,}000 \text{ rad/s}^2 = .010 \text{ Nm}$$

With a triangular speed profile this requires a peak speed up to 477.5 rpm, with a load torque of 10 mNm. Therefore the peak power required for the load alone is 0.50 W.

$$P = \tau \times \omega = .010 \text{ Nm} \times 50 \text{ rad/s} = .50 \text{ Watts}$$

Let us first consider the P430 with rotor inertia of 3×10^{-7} kgm^2. We have:

$$J_{total} = J_{load} + J_{motor} = (20 \times 10^{-7} \text{ kg-m}^2) + (3 \times 10^{-7} \text{ kg-m}^2) = 23 \times 10^{-7} \text{ kg-m}^2$$

$$\tau_{total} = J_{total} \times \alpha = 23 \times 10^{-7} \text{ kg-m}^2 \times 5{,}000 \text{ rad/s}^2 = .0115 \text{ Nm} = 11.5 \text{ mNm}$$

The curve shows that P430-258-005 with current limit of 1.6 A and 24 V can easily do the job.

In fact, at around 500 rpm the motor can provide up to 43 mNm. With a safety factor of 75% we could easily provide 32 mNm with the P430 and the motion time could be reduced as followed:

$$\alpha_{max} = \tau_{max} / J_{total} = 32 \times 10^{-3} \text{ Nm} / 23 \times 10^{-7} \text{ kg-m}^2 = 13{,}913 \text{ rad/s}^2.$$

$$\Delta t = \sqrt{(2 \times \theta / \alpha_{max})} = \sqrt{(2 \times 0.25 \text{ rad} / 13{,}913 \text{ rad/s}^2)} = 6.0 \text{ msec}$$

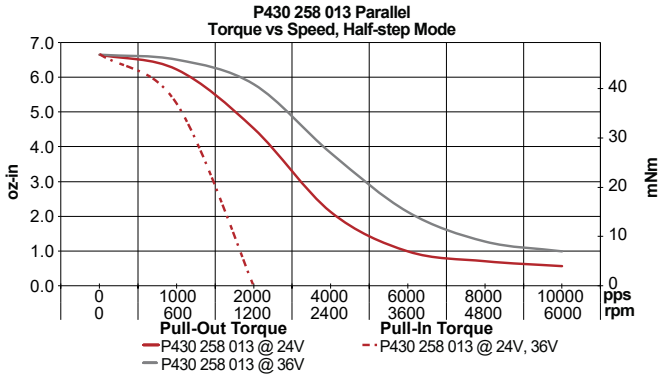

Engineer's Appendix

Chopper Driver – With Gearbox – With Ramping Acceleration

The P310 has a holding torque 14 mNm at nominal current and would not be able to directly provide 10 mNm at 477 rpm for accelerating the load. However we could use a gearbox to achieve the work. A first choice consists of matching inertias, and then making sure that with the selected ratio the motor speed remains within a reasonable range and the necessary torque can be delivered. With incremental motion, an inertial match assures the shortest move time, with the motor providing constant torque over the speed range considered. In our example this calls for a desired ratio i_0 of:

$$i_0 = \sqrt{(J_{load}/J_{motor})} = \sqrt{(20 \text{ kg-m}^2/0.86 \text{ kg-m}^2)} = 4.82 \qquad \text{[no units]}$$

From the various gearhead models available for combination with the P310 stepper motor, we select the K24. This gearhead offers a ratio of 5:1 which is close enough to our target 4.82, and has an efficiency of 85%.

The load inertia reflected onto the motor shaft is calculated by:

$$J_{load\ at\ motor} = J_{load\ at\ gearbox} / (i^2 \times 0.85) = 20 \times 10^{-7} / (52 \times 0.85)$$

$$J_{load\ at\ motor} = 0.94 \times 10^{-7} \text{ kg-m}^2.$$

If we now consider the previous values reflected on the motor shaft, the required motor acceleration, angular speed, and step rate are:

$$\alpha_{at\ motor} = \alpha_{at\ gearbox} \times i = 5{,}000 \text{ rad/s}^2 \times 5 = 25{,}000 \text{ rad/s}^2$$

$$\omega_{at\ motor} = \omega_{at\ gearbox} \times i = 50 \text{ rad/s} \times 5 = 250 \text{ rad/s}$$

$$f = (250 \text{ rad/s})/(2\pi \text{ rad/rev}) \times 60 \text{ steps/rev} = 2{,}387 \text{ steps/s}$$

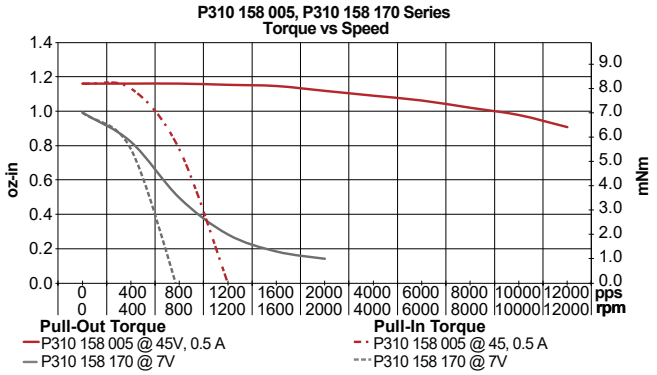

$$\tau = (J_{load\ at\ motor} + J_{motor}) \times \alpha_{at\ motor} = (0.94 + 0.86) \times 10^{-7} \text{ kgm}^2 \times 25{,}000 \text{ rad/s}^2 = .0045 \text{ Nm} = 4.5 \text{ mNm}$$

The pull-out torque curve shows that at around 2,000 steps/s the P310-158-005 with coil in series, chopper drive, 45 V Vdc and a 0.5 A current limit can provide up to 8 mNm. With a safety factor of 75% we have up to 6 mNm available and the motor with gearhead can easily perform the job.

Here again, the shortest move time would be:

$$\tau_{max} = 6 \text{ mNm}$$

$$\alpha_{max\ at\ motor} = \tau_{max} / (J_{load\ at\ motor} + J_{motor}) = .006 \text{ Nm} / 1.8 \times 10^{-7} \text{ kg-m}^2 = 33{,}333 \text{ rad/s}^2$$

$$\alpha_{max\ at\ gearbox} = \alpha_{max\ at\ motor} / 5 = 6{,}666 \text{ rad/s}^2$$

$$\Delta t = \sqrt{(2 \times \theta / \alpha_{max\ at\ gearbox})} = \sqrt{(2 \times 0.25 \text{ rad} / 7{,}230 \text{ rad/s}^2)} = 8.7 \text{ msec}$$

The P310 with K24 0 5 is an excellent alternative to the P430 if a smaller diameter is required. DMM motors feature not only a low inertia rotor, but also a very strong magnetic design which enables use at high speed compared to other multi-pole stepper motors.

V092020 • © 2020 Portescap. Specifications subject to change without notice.

Examples of Can Stack Step Motor calculations

Example: Drive with a Can Stack Step Motor with a frictional torque load

For this application we will consider a Step Motor for an intermittent duty application. The application requirements are:

Available voltage:	24 Vdc		
Available current:	2 Amp		
Motor operating point:	67.5°	[θ]	desired motor position
	15 mNm	[τ]	desired motor torque
	0.06	[Δt]	desired move time
	Intermittent operation		

If a 7.5° per step motor is used, then the motor would have to take nine steps to move 67.5°.

67.5°/7.5° = 9 steps f = step rate = 9 steps/0.06 sec = 150 steps/s

In the figure below the maximum pull-in rate with a torque of 15 mNm is 275 steps/s. We use the pull-in torque curve for this calculation because the control circuit does not provide any ramping. The maximum speed the motor can reach during operation is limited by the maximum speed the motor can start at without missing any steps. This is what the pull-in torque curve represents.

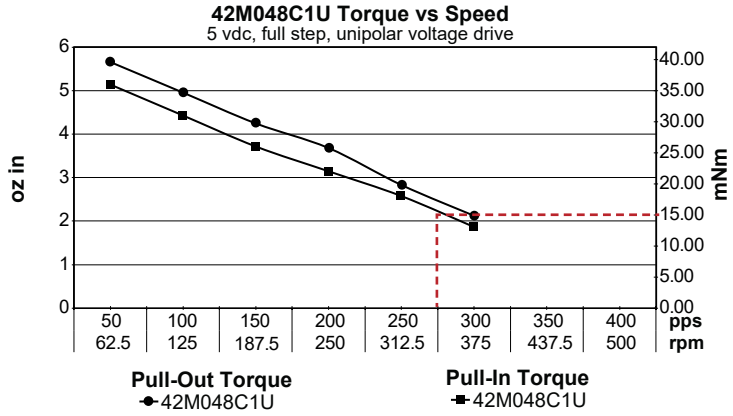

The problem is now solved. The Can Stack motor 42M048C1U motor could be used at 150 steps/s because this point falls well below the pull-in torque curve.

Use the pull-out torque curve in conjunction with a Torque = Inertia × Acceleration ($\tau = J \times \alpha$) analysis when the load is inertial and/or acceleration control is provided.

In this equation acceleration or ramping is in rad/s2 $\alpha = \Delta\omega/\Delta t = rad/s^2$

Ramping:

Acceleration control or ramping is normally accomplished by gating on a voltage controlled oscillator (VCO) and the associated charging capacitor. Varying the RC time constant will give different ramping times. A typical VCO acceleration control frequency plot for an incremental movement with equal acceleration and deceleration time would be as shown below.

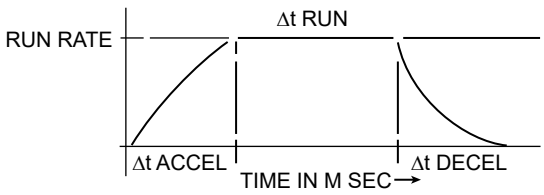

Engineer's Appendix

Acceleration also may be accomplished by changing the timing of the input pulses (frequency). For example, the frequency could start at a ¼ rate; go to ½ rate, ¾ rate and finally the running rate.

For applications where ramping acceleration or deceleration control time is allowed:

$$\tau_J = J_T \times \Delta\omega/\Delta t$$

Where J_T = rotor inertia (gm^2) + load inertia (gm^2)

Δf = step rate change
Δt = time allowed for acceleration in seconds
λ = steps per revolution (for Portescap Can Stacks this can be 20 steps/rev, 24 steps/rev, or 48 steps/rev)

$$\omega = f \text{ steps/s} \times 2\pi \text{ rad/rev} \times 1/(\lambda \text{ steps/rev}) \quad [\text{rad/s}]$$

Dividing by Δt:

$$\Delta\omega/\Delta t = \Delta f/\Delta t \text{ step/s}^2 \times 2\pi \text{ rad/rev} \times 1/(\lambda \text{ step/rev}) \quad [\text{rad/s}^2]$$

Plugging this definition of $\Delta\omega/\Delta t$ into the equation for τ_J yields:

$$\tau_J = J_T \times \Delta f/\Delta t \text{ step/s}^2 \times 2\pi \text{ rad/rev} \times 1/(\lambda \text{ step/rev}) \quad [\text{mNm}]$$

In order to solve an application problem using acceleration ramping, it is usually necessary to make several estimates to avoid needing a procedure similar to the one used in the following example.

Example: Frictional torque plus inertial load with acceleration control

For this application we are looking for Stepper Motor for an intermittent duty application. The application requirements are:

Available voltage:	24 Vdc	
Available current:	3 Amp	
Motor operating point:	67.5°	[θ] - desired motor position
	15 mNm	[τ_f] – frictional load
	< 0.5	[Δt] - desired move time
	Intermittent operation	
Motor dimensions:	60 mm	maximum allowable length
	60 mm	maximum allowable diameter

An assembly device must move 4 mm in less than 0.5 seconds. The motor will drive a lead screw through a gear reduction. The lead screw and gear ratio were selected so that 100 steps of a 7.5° per step motor results in 4 mm of linear motion.

The total inertial load (rotor + gear + screw) = 25×10^{-4} gm^2. The frictional load is 15 mNm.

(1) Select a stepper motor pull-out torque curve which allows a torque in excess of 15 mNm at a step rate greater than:

$$f = 100 \text{ steps}/0.5 \text{ sec} = 200 \text{ steps/s}$$

V092020 • © 2020 Portescap. Specifications subject to change without notice.

At a step rate of 250 steps/s (safely over 200 steps/s) the 42M048C1U is capable of providing 20 mNm.

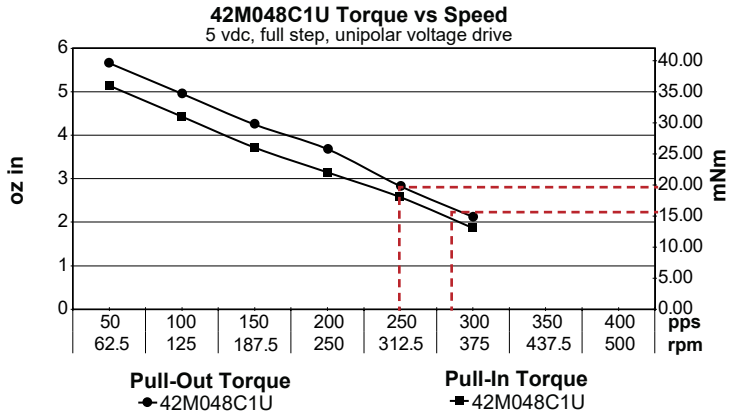

(2) Make a first an estimate of a working rate (a running rate less than the maximum) and determine the torque available to accelerate the inertia (excess over τ_F) τ_A = torque available.

$$\tau_A - \tau_F = 20 \text{ mNm} - 15 \text{ mNm} = 5 \text{ mNm}$$

(3) Using a 60% safety margin

$$5 \text{ mNm} \times 0.6 = 3 \text{ mNm}$$

Calculate Δt to accelerate.

From the equation:

$$\tau_J = J_T \times \Delta f/\Delta t \text{ steps/s}^2 \times 2\pi \text{ rad/rev} \times 1/(\lambda \text{ steps/rev})$$

$$\lambda = 48 \text{ steps/rev (from 7.5° per step)}$$

We rearrange to solve for Δt.

$$\Delta t = (25 \times 10\text{-}4 \text{ kgm2} \times 250 \text{ steps/s} \times 2\pi \text{ rad/rev} \times 1/(48 \text{ steps/rev})) / 3 \text{ mNm} = 0.027 \text{ sec}$$

Note: The same amount of time is allowed to decelerate the load.

(4) Determine the number of steps used to accelerate and decelerate.

$$N_A + N_D = f/2 \times \Delta t \times 2$$

< OR >

$$N_A + N_D = f \times \Delta t = 250 \text{ steps/s} \times 0.027 \text{ sec} = 6.75 \text{ steps} \rightarrow 7 \text{ steps needed to complete the move}$$

(5) Calculate the time to move at the run rate.

N_T = total steps/revolution – steps required to make the desired move

$$N_T = 100 \text{ steps} - 7 \text{ steps} = 93 \text{ steps}$$

$$\Delta t_{run} = N_T/(N_A + N_D) = 93 \text{ steps} / (125 \text{ steps} + 125 \text{ steps}) = 0.37 \text{ sec}$$

(6) The total time to move is determined as follows:

$$\Delta t_{run} + \Delta t_{accel} + \Delta t_{decel} = \Delta t_{total}$$

$$0.37 \text{ sec} + 0.027 \text{ sec} + 0.027 \text{ sec} = 0.42 \text{ sec}$$

The problem is now solved. The Can Stack stepper motor 42M048C1U is a good first estimate. This motor can be moved slower if more of a safety factor is desired.

Example: No ramping acceleration or deceleration control is allowed.

Even though no acceleration time is provided, the stepper can lag a maximum of two steps or 180° electrical degrees. If the motor goes from zero steps/sec to f steps/sec the lag time Δt would be

$$\Delta t = 2/f$$

The torque equation for no acceleration or deceleration is:

$$\tau_J = J_T \times f2/2 \times 2\pi/\lambda$$

Where: J_T = rotor inertia (gm^2) + load inertia (gm^2) = 25×10^{-4} gm^2

$$f = 250 \text{ steps/s}$$

$$\lambda = 48 \text{ steps/rev (from 7.5° per step)}$$

Example: Friction plus inertia and no acceleration ramping.

For this application we are looking for Stepper motor for a continuous duty application. The application requirements are:

A tape capstan is to be driven by a stepper motor.

Motor operating point:	12 mNm	[τ_f] – frictional load
	10×10^{-4} gm^2	[J_L] – load inertia
	Continuous operation	

The capstan must rotate in 7.5° increments at a rate of 200 steps/s.

Since a torque greater than 12 mNm at 200 steps/s is required, consider the Can Stack stepper motor 42M048C1U.

The total inertia = motor rotor inertia + load inertia

$$J_T = J_R + J_L$$

$$J_T = 12.5 \times 10^{-4} \text{ gm}^2 + 10 \times 10^{-4} \text{ gm}^2$$

$$J_T = 22.5 \times 10^{-4} \text{ gm}^2$$

V092020 • © 2020 Portescap. Specifications subject to change without notice.

(1) Since no acceleration ramping will be provided, use the following equation:

$$\tau_J = J_T \times f2/2 \times 2\pi/\lambda$$

$$\tau_J = 22.5 \times 10^{-4}\ gm^2 \times (200\ steps/s)2/2 \times 2\pi/(48\ steps/rev)$$

$$\tau_J = 5.85\ mNm$$

(2) Total torque

$$\tau_T = \tau_F + \tau_J$$

$$\tau_T = 12\ mNm + 5.85\ mNm = 17.85\ mNm$$

(3) Refer to the pull-out torque curve below at a speed of 200 steps/s, where the available torque is 26 mNm.

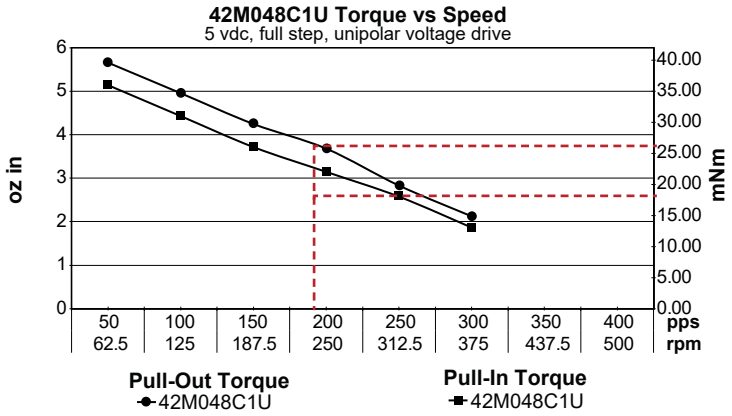

The problem is now solved. The Can Stack stepper motor 42M048C1U can perform in this application, with a safety factor.

North America
110 Westtown Road
West Chester, Pennsylvania 19382
Tel: +1 610 235 5499
sales.america@portescap.com
portescap.com

South America
Avenida João Paulo Ablas, 2970
Jardim da Glória - Cotia, SP
06711-250 – Brasil
Tel: +55 11 3616 0199
vendas@portescap.com
portescap.com.br

Europe
Portescap S.A.
Rue Jardinière 157, Case Postale
CH-2301 La Chaux-de-Fonds
Switzerland
Tel: +41 32 925 62 40
sales.europe@portescap.com
portescap.ch

China
4th Floor, Building 9, No 518
North Fuquan Road,
Changning District
Shanghai, 200335
P.R. China
Tel: +86 21 8028 1516
sales.asia@portescap.com
portescapmotor.cn

Japan
28F Shinagawa Intercity Tower A
2-15-1 Konan, Minato-ku
Tokyo 108-6028 Japan
Tel: +81 3 6717 4155
sales.asia@portescap.com
portescap.co.jp

Korea
Rm 3033, 30F ASEM Tower
517 Yeongdong-daero, Gangnam-gu,
Seoul 06164 Korea
Tel: +82 2 6001 3247
sales.asia@portescap.com
portescap.kr

India
Portescap
Unit No. 2, SDF-1
SEEPZ-SEZ
Andheri East, Mumbai 400 096
India
Tel: +91 22 4200 6200
+91 22 4200 6201
sales.asia@portescap.com
portescap.com

Portescap

©2020. Portescap. All rights reserved.
Specifications subject to change without notice. It is the responsibility of the product user to determine the suitability of a product for a specific application. All trademarks property of their respective owners.

Lit code: 0212 V092020Eng